Smart choice for power™

xantrex™
A MISSION CRITICAL ELECTRONICS BRAND

Owner's Guide

TRUEcharge3 Series Battery Charger

Models

TRUEcharge3 12VDC 20A | 804-1220-10
TRUEcharge3 12VDC 40A | 804-1240-10
TRUEcharge3 12VDC 60A | 804-1260-10
TRUEcharge3 24VDC 10A | 804-2410-10
TRUEcharge3 24VDC 20A | 804-2420-10
TRUEcharge3 24VDC 30A | 804-2430-10

Copyright © 2023-26 Xantrex LLC. All Rights Reserved.
All trademarks are owned by Xantrex LLC and its affiliates. **Exclusion for Documentation**

UNLESS SPECIFICALLY AGREED TO IN WRITING, SELLER

(A) MAKES NO WARRANTY AS TO THE ACCURACY, SUFFICIENCY OR SUITABILITY OF ANY TECHNICAL OR OTHER INFORMATION PROVIDED IN ITS MANUALS OR OTHER DOCUMENTATION;

(B) ASSUMES NO RESPONSIBILITY OR LIABILITY FOR LOSSES, DAMAGES, COSTS OR EXPENSES, WHETHER SPECIAL, DIRECT, INDIRECT, CONSEQUENTIAL OR INCIDENTAL, WHICH MIGHT ARISE OUT OF THE USE OF SUCH INFORMATION. THE USE OF ANY SUCH INFORMATION WILL BE ENTIRELY AT THE USER'S RISK; AND

(C) REMINDS YOU THAT IF THIS MANUAL IS IN ANY LANGUAGE OTHER THAN ENGLISH, ALTHOUGH STEPS HAVE BEEN TAKEN TO MAINTAIN THE ACCURACY OF THE TRANSLATION, THE ACCURACY CANNOT BE GUARANTEED. APPROVED CONTENT IS CONTAINED WITH THE ENGLISH LANGUAGE VERSION WHICH IS POSTED AT https://www.xantrex.com/.

NOTE: Visit https://www.xantrex.com/, select PRODUCTS, select a Product category, select a Product, select DOWNLOADS, and choose a document from the list that may provide a translation of the English guide, if available.

Document Number: 975-1183-01-01 Rev E **Date:** June 2026

Product Names and Numbers:

TRUEcharge3 12VDC 20A | 804-1220-10	TRUEcharge3 12VDC 60A | 804-1260-10	TRUEcharge3 24VDC 20A | 804-2420-10
TRUEcharge3 12VDC 40A | 804-1240-10	TRUEcharge3 24VDC 10A | 804-2410-10	TRUEcharge3 24VDC 30A | 804-2430-10

Contact Information

Telephone: +1-800-670-0707 / +1-408-987-6030
Email: customerservice@xantrex.com,
https://xantrex.com/support/get-customer-support/
Web: https://www.xantrex.com/

Information About Your System

As soon as you open your product, record the following information and be sure to keep your proof of purchase.

Serial Number _____

Product Number _____

Purchased From _____

Purchase Date _____

To view, download, or print the latest revision, visit the website shown under **Contact Information**.

Purpose

The purpose of this Owner's Guide is to provide explanations and procedures for installing, operating, configuring, maintaining, and troubleshooting a TRUEcharge3 Series Battery Charger for Recreational or Commercial Marine installations.

Scope

The guide provides safety and operating guidelines as well as information on installing, configuring, and maintaining the charger. It also provides information about troubleshooting the unit. It does not provide details about particular brands of batteries. You need to consult individual battery manufacturers for this information.

Audience

The guide is intended for users and operators of the TRUEcharge3 Series Battery Charger.The Installation section starting *on page 24* is intended for qualified personnel.

Qualified personnel have training, knowledge, and experience in:

- Installing electrical equipment.
- Applying all applicable installation codes.
- Analyzing and reducing the hazards involved in performing electrical work.
- Selecting and using Personal Protective Equipment (PPE).

Related Information

You can find more information about Xantrex products and services at https://www.xantrex.com/.

Abbreviations and Acronyms

A	Amperes
ABYC	American Boat and Yacht Council
AC, ∼	Alternating Current
Ah	Amp-hours (a unit of battery capacity)
AGM	Absorbed Glass Mat (a battery type)
BTS	Battery Temperature Sensor
DC, ⎓	Direct Current
EMC	Electromagnetic Compatibility - Emissions and Immunity
EMI	Electromagnetic Interference source
FLD	Flooded (a battery type)
GEL	Gel battery
GFCI	Ground Fault Circuit Interrupter
in-lb	inch-pound force (a unit of torque)
IP XX	Ingress protection rating code for example, IP32
kW	Kilowatts (1000 watts)
LCD	Liquid Crystal Display
LED	Light Emitting Diode
LFP	$LiFePO_4$ (lithium iron phosphate – a battery type)
L, G, N	Line, Ground/Earth, Neutral
NEC	USA National Electrical Code (NFPA 70)
N-m	Newton-meters (a unit of torque)
PN	Product Number
PPE	Personal Protective Equipment
V	Voltage
VAC, V∼,	Volts AC
VDC, V⎓	Volts DC
W	Wattage

Product rating and safety labels

Read these instructions carefully and look at the equipment to become familiar with the device before installing, operating, configuring, maintaining, and troubleshooting it. The following special messages may appear throughout this documentation or on the equipment to warn of potential hazards or to call attention to information that clarifies or simplifies a procedure.

The addition of either symbol to a “Danger” or “Warning” safety label indicates that an electrical hazard exists which will result in personal injury if the instructions are not followed.

This is the safety alert symbol. It is used to alert you to potential personal injury hazards. Obey all safety messages that follow this symbol to avoid possible injury or death.

⚠ DANGER

DANGER indicates a hazardous situation which, if not avoided, **will result in** death or serious injury.

⚠ WARNING

WARNING indicates a hazardous situation which, if not avoided, **could result in** death or serious injury.

⚠ CAUTION

CAUTION indicates a hazardous situation which, if not avoided, **could result in** minor or moderate injury.

NOTICE

NOTICE is used to address practices not related to physical injury.

Figure 1 Product rating label (sample)

NOTE: Actual label may vary.

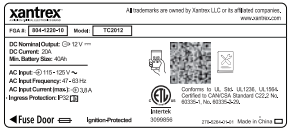

Figure 2 Product safety label (sample)

NOTE: Actual label may vary.

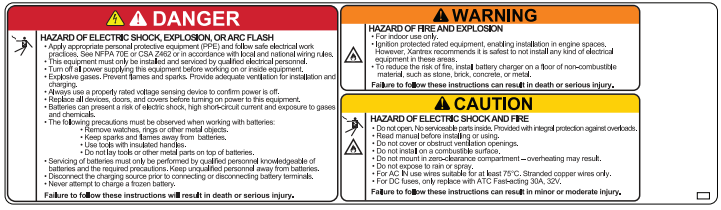

This page is intentionally left blank. [2]

IMPORTANT SAFETY INSTRUCTIONS

SAVE THESE INSTRUCTIONS

1. SAVE THESE INSTRUCTIONS—This manual contains important safety and operating instructions for the battery charger.
2. Do not expose charger to rain or snow.
3. Use of an attachment not recommended or sold by the battery charger manufacturer may result in a risk of fire, electric shock, or injury to persons. Note: For Lithium-Ion batteries, a qualified battery management system (BMS) must ALWAYS be used.
4. Ensure that all wiring is of a size large enough for AC ampere rating of charger as specified by local and national electrical codes.
   CAUTION—Risk of Fire. Use only on circuits provided with appropriate branch circuit protection in accordance with local, national, and regional regulations.
5. Do not operate charger with damaged wiring or wiring connections.
6. Do not operate charger if it has received a sharp blow, been dropped, or otherwise damaged in any way; take it to a qualified service person.
7. Do not disassemble charger; take it to a qualified service person when service or repair is required. Incorrect reassembly may result in a risk of electric shock or fire. ALL SERVICING should be performed by qualified service personnel.
8. To reduce risk of electric shock, disconnect all AC and DC connections to charger before attempting any maintenance or cleaning. Turning off controls will not reduce this risk.
9. WARNING—RISK OF EXPLOSIVE GASES.
   a. WORKING IN VICINITY OF A LEAD-ACID BATTERY IS DANGEROUS. BATTERIES GENERATE EXPLOSIVE GASES DURING NORMAL BATTERY OPERATION. FOR THIS REASON, IT IS OF UTMOST IMPORTANCE THAT YOU READ AND FOLLOW THE INSTRUCTIONS EXACTLY BEFORE EACH TIME YOU USE THE CHARGER.
   b. To reduce risk of battery explosion, follow these instructions, those marked on the battery and published by battery manufacturer and manufacturer of any equipment you intend to use in vicinity of battery. Review cautionary marking on these products and on engine.

10. PERSONAL PRECAUTIONS

a. Consider having someone close enough by to come to your aid when you work near a lead-acid battery.

b. Have plenty of fresh water and soap nearby in case battery acid contacts skin, clothing, or eyes.

c. Wear complete eye protection and clothing protection. Avoid touching eyes while working near battery.

d. If battery acid contacts skin or clothing, wash immediately with soap and water. If acid enters eye, immediately flood eye with running clean cold water for at least 10 minutes and get medical attention immediately.

e. NEVER smoke or allow a spark or flame in vicinity of battery or engine.

f. Be extra cautious to reduce risk of dropping a metal tool onto battery. It might spark or short-circuit battery or other electrical part that may cause explosion. It is recommended to use only insulated tools when working with batteries.

g. Remove personal metal items such as rings, bracelets, necklaces, and watches when working with a lead-acid battery. A lead-acid or other battery type can produce a short-circuit current high enough to weld a ring or the like to metal, causing a severe burn.

h. Use charger for charging Lead-Acid or Lithium-Ion batteries only. The charging terminals are not intended to supply power to an extra-low-voltage electrical system other than in starter-motor or power storage applications. Do not use battery charger for charging dry-cell or primary batteries that are commonly used with home appliances. These batteries may burst and cause injury to persons and damage to property.

i. NEVER charge a frozen battery. NEVER charge a Lithium-Ion battery in an environment at or below 0 °C (32 °F).

11. PREPARING TO CHARGE

a. If necessary to remove battery from vessel to charge, always remove grounded (DC neg(-) bus connected) terminal from battery first. Make sure all accessories in the vessel are off, so as not to cause an arc.

b. Be sure area around battery is well ventilated while battery is being charged.

c. Clean battery terminals. Be careful to keep corrosion from coming in contact with eyes or skin.

d. For flooded lead-acid batteries add distilled water in each cell until battery acid reaches level specified by battery manufacturer. Do not overfill. For a battery without removable cell caps, such as valve regulated lead acid batteries, carefully follow manufacturer’s recharging instructions.

e. Study all battery manufacturer’s specific precautions and recommended rates of charge prior to charging.

f. Determine voltage of battery by referring to vessel owner’s manual and make sure it matches output rating

of battery charger. Charge battery initially at lowest charge rate, if possible.

12. CHARGER LOCATION
    a. Locate charger as far away from battery as DC cables permit.
    b. Never place charger directly above battery being charged; gases from battery will corrode and damage charger.
    c. Never allow battery acid to drip on charger when reading electrolyte specific gravity or filling battery.
    d. Do not operate charger in a closed-in area or restrict ventilation in any way.
    e. Do not set a battery on top of charger.
13. DC CONNECTION PRECAUTIONS
    a. Connect and disconnect DC output terminals only after setting any charger switches/controls to OFF position and removing AC input connection.
    DANGER—NEVER allow positive/negative connections to touch each other.
    b. Attach connections to battery and DC neg(-) bus as indicated in 14(e), 14(f), and 15(b) through 15(d) below.
14. FOLLOW THESE STEPS WHEN BATTERY IS INSTALLED IN VESSEL. A SPARK NEAR BATTERY MAY CAUSE BATTERY EXPLOSION. TO REDUCE RISK OF A SPARK NEAR BATTERY:
    a. Position AC and DC cords to reduce risk of damage by hood, door, or moving engine part.
    b. Stay clear of fan blades, belts, pulleys, and other parts that can cause injury to persons.
    c. Check polarity of battery posts. POSITIVE (POS, P, +) battery post usually has larger diameter than NEGATIVE (NEG, N,–) post.
    CAUTION—The Negative (-) terminal of this battery charger is grounded.
    d. Determine which post of battery is grounded (connected) to the DC neg(-) bus. If negative post is grounded to DC neg(-) bus (as in most vessels). This battery charger is not designed for a battery positive referenced ground (DC neg(-) bus connection) system, only use in a Negative grounded vessel system.
    e. For negative-grounded vessel, connect POSITIVE (RED) connection from battery charger to POSITIVE (POS, P, +) ungrounded post of battery. Connect NEGATIVE (BLACK) clip to vessel DC neg(-) bus or engine block away from battery. Do not connect clip to carburetor, fuel lines, or sheet-metal body parts. Connect to a heavy gauge metal part of the frame or engine block.
    f. See operating instructions for length of charge information.
    g. When disconnecting charger, turn switches to off, disconnect AC input power, remove connection from vessel DC neg(-) bus, and then remove connection from battery positive terminal.

15. FOLLOW THESE STEPS WHEN BATTERY IS OUTSIDE VESSEL. A SPARK NEAR THE BATTERY MAY CAUSE BATTERY EXPLOSION. TO REDUCE RISK OF A SPARK NEAR BATTERY:
    a. Check polarity of battery posts. POSITIVE (POS, P, +) battery post usually has a larger diameter than NEGATIVE (NEG, N, –) post.
    b. Attach at least a 60 cm (24-inch-long) 6-gauge (AWG) insulated battery cable to NEGATIVE (NEG, N, -) battery post.
    c. Connect POSITIVE (RED) charger connection to POSITIVE (POS, P, +) post of battery.
    d. Position yourself and free end of cable as far away from battery as possible – then connect NEGATIVE (BLACK) charger clip to free end of cable.
    e. Do not face battery when making final connection.
    f. When disconnecting charger, always do so in reverse sequence of connecting procedure and break first connection while as far away from battery as practical.
    g. GROUNDING INSTRUCTIONS—This battery charger should be connected to a grounded, metal, permanent wiring system; or an equipment-grounding conductor should be run with circuit conductors and connected to equipment-grounding terminal or lead on battery charger. Connections to battery charger should comply with all local codes and ordinances.

Regulatory

The TRUEcharge3 conforms to the appropriate UL and CSA product safety standards. For more information see *Regulatory Approvals on page 73*.

EMC Information to the User

This equipment has been tested and found to comply with the limits for a Class B digital device, pursuant to part 15 of the FCC Rules. These limits are designed to provide reasonable protection against harmful interference in a residential installation. This equipment generates, uses, and can radiate radio frequency energy and, if not installed and used in accordance with the instructions, may cause harmful interference to radio communications.

However, there is no guarantee that interference will not occur in a particular installation. If this equipment does cause harmful interference to radio or television reception, which can be determined by turning the equipment off and on, the user is encouraged to try to correct the interference by one or more of the following measures:

- Reorient or relocate the receiving antenna.
- Increase the separation between the equipment and receiver.
- Connect the equipment into an outlet on a circuit different from that to which the receiver is connected.
- Consult the dealer or an experienced radio/TV technician for help.

⚠CAUTION

Unauthorized changes or modifications to the equipment could void the user’s authority to operate the equipment.

End of Life Disposal

The TRUEcharge3 Series Battery Charger is designed with environmental awareness and sustainability in mind. At the end of its useful life, the TRUEcharge3 can be decommissioned and disassembled. Components which can be recycled must be recycled and those that cannot be recycled must be disposed of according to local, regional, or national environmental regulations.

Many of the electrical components used in the TRUEcharge3 Series Battery Charger are made of recyclable material like steel, copper, aluminum, and other alloys. These materials can be auctioned off to traditional scrap metal recycling companies who resell reusable scraps.

Electronic equipment such as the circuit boards, connectors, and fuses can be broken down and recycled by specialized recycling companies whose goal is to avoid having these components end up in the landfill.

For more information on disposal, contact Xantrex.

CONTENTS

Important Safety Instructions vii
Regulatory x
EMC Information to the User xi
End of Life Disposal xii
Introduction 1
TRUEcharge3 Series Battery Charger 2
Product Features 2
Features 5
Front Panel 6
Rear Panel 7
Onboard Status LED Panel 8
Basic Installation 11
Preparing For Installation 12
Tools and Materials 14
Location 15
Wiring Requirements 18
Configuring Charge Current for Battery Size 22
Installing the TRUEcharge3 Series Battery Charger 23
Installation Sequence 24
Installing a Parallel Configuration 32
Battery Charger Operation 35
Input Voltage Operating and Derating 36
Multi-Stage Charging 37
Three-Stage Charging 38
Two-Stage Charging 39
Quiet Mode Charging 40
Charging Voltage Setpoints 40
Battery Qualification 41
Temperature Considerations 41
Setting the Battery Temperature without a BTS 41
Configuration 43
Configuring the Battery Charger 44
Configuring the Charger Stage 44
Configuring the Battery Type 44
Operation 47
Operating DC Loads 47

Transitioning Power States 48
Charging Batteries 49
Equalizing Flooded Batteries 50
Interpreting Charger Information 53
Reading Onboard Display LEDs 53
Indicator LEDs and Status Text on the Onboard Display Panel 54
Interpreting Fault and Warning Indicators 56
Reporting While Charging or Equalizing 59
Reporting Without AC Power or While on Standby 59
Using A Generator As Source Power 60
Troubleshooting 61
Maintaining the Charger 62
Replacing the Fuses 63
Fuse Replacement Ratings 64
Troubleshooting 65
Specifications 69
Physical Specifications 70
Environmental Specifications 70
AC Input Specifications 71
DC Output Specifications 71
Protection Features 72
Regulatory Approvals 73

1 INTRODUCTION

This chapter describes the standard features of a TRUEcharge3 Series Battery Charger, as well as its protection features.

TRUEcharge3 Series Battery Charger *2*
Product Features *2*

TRUEcharge3 Series Battery Charger

The TRUEcharge3 ships with the following items:

A. one TRUEcharge3 unit
B. one Product Notice
C. four rubber boots for DC terminals
D. five sets of nuts and washers (M6) for DC terminals and ground stud
E. strain relief clamp for AC input cables
F. three crimp connectors for AC wiring

Figure 3 What's in the Box

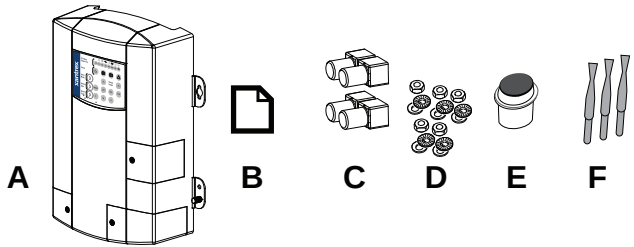

NOTE: Keep the carton and packing material in case you need to return the TRUEcharge3 for servicing.

Product Features

The TRUEcharge3 Series Battery Charger provides the following standard features:

- up to three full current rated outputs,
- battery monitoring functions,
- correct charging voltage for batteries when connected to almost any single phase AC power outlet in the world,
- low electromagnetic interference (EMI),
- automatic charge resumption, if required, after AC power interruption,
- programmable custom charge settings,
- fully discharged battery charging,
- quiet mode,
- ability to operate two TRUEcharge3s in parallel mode with the use of the optional remote panel.

The TRUEcharge3 provides the following protection features:

- battery reverse polarity protection via user-replaceable output fuse(s)
- AC input out-of-range derating and shutdown
- ambient over-temperature derating and shutdown
- battery over-charging protection
- electronic current limiting provides protection against short circuit conditions on the charger's output
- ignition-protected rating, enabling installation in engine spaces
- short circuit protection for the optional BTS and also the communication connector ports
- drip-proof rubber boots for DC terminals for added moisture protection,
- IP32 drip protection rating (certain mounting orientations)

The following accessories are available for the TRUEcharge3[a]:

- The optional Remote Panel (PN: 808-8040-10) provides the following features:
  - Can be mounted up to 15m (50 ft) away for remote control and monitoring
  - Can control parallel units and activate quiet mode
- The optional Battery Temp Sensor (BTS) with 7.6m (25-ft) cable (PN: 808-0232-01) provides these protection features:
  - battery under-temperature charging protection
  - battery over-temperature charging protection
  - charging voltage compensation based on the temperature of the battery the BTS is connected to

[a] Contact Xantrex or your Xantrex dealer for these optional accessories.

This page is intentionally left blank. [2]

2 FEATURES

This section identifies the default settings and the hardware features of the TRUEcharge3 Series Battery Charger. This section includes:

Front Panel *6*
Rear Panel *7*
Onboard Status LED Panel *8*

Front Panel

Figure 4 Front Panel

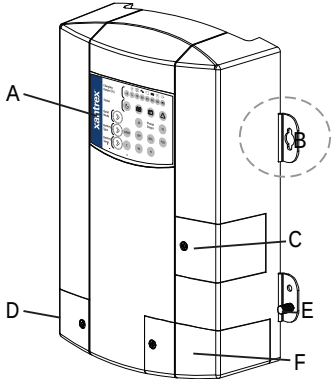

Item	Description
A	Onboard control and status display panel or simply onboard display (see *Onboard Status LED Panel on page 8* for more information) for controlling the TRUEcharge3 Battery Charger settings and for monitoring charger status and charging current.
B	Mounting flanges are used to permanently install the product.
C	Fuse access panel cover provides access to the DC fuse in the event of an accidental reverse battery polarity installation. Remove and replace the cover when replacing a fuse or fuses.
D	AC wiring compartment cover provides the installer with easy access to the AC wiring compartment, to allow for a trouble free installation. Remove and replace when installing the product.
E	DC ground stud for connecting the charger's chassis to ground.
F	DC wiring compartment cover protects the DC terminals, as well as the communication and BTS ports. Remove and replace when installing cables.

⚠WARNING

ELECTRICAL SHOCK HAZARD

Replace the wiring compartment cover before turning on power to this equipment.

Failure to follow these instructions can result in death, serious injury, or equipment damage.

⚠DANGER

ELECTRICAL SHOCK HAZARD

Disconnect the batteries and AC power before opening the wiring compartment cover.

Failure to follow these instructions will result in death or serious injury.

Rear Panel

This section describes the inside parts of the TRUEcharge3 including the terminals and ports.

Figure 5 Rear Panel

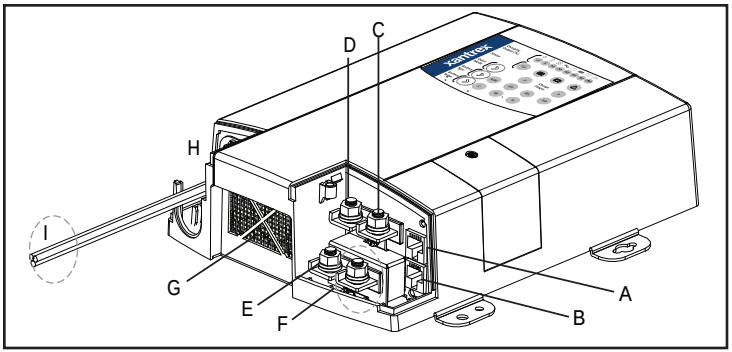

Item	Description
A	**Communication port** - remote panel port
B	**BTS port** - battery temperature sensor port
C	**Battery positive** (+) - for bank 3 (6 mm stud)
D	**Battery positive** (+) - for bank 2 (6 mm stud)
E	**Battery positive** (+) - for bank 1 (6 mm stud)
F	**Battery negative** (–) - common for all three banks (6 mm stud)
G	**Air vents** - located inside is the fan assembly

Item	Description
H	**AC wiring compartment**
I	**AC pigtail wiring** - line, neutral, and ground input wires

Onboard Status LED Panel

This section describes the parts of the onboard status LED panel of the TRUEcharge3.

Figure 6 Onboard Status LED Panel

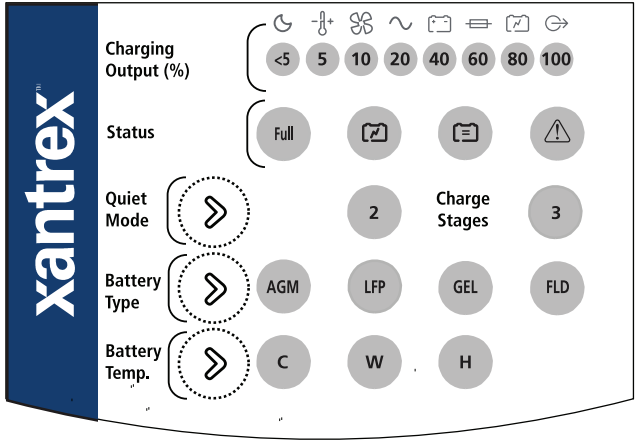

Item	Description
Charging Output (%) LEDs	The LEDs illuminate like a bar graph displaying the present total output charge current as a percentage of the maximum rated charge current. For example, unit model TRUEcharge3 12VDC 40A has a maximum rated charge current of 40 A so at 60% (that is, the LED 60 is lit) the charger's current output is 24 A. The numbers on the LEDs represent the percentage values. **NOTE**: When the maximum Charge Output current is limited, the LEDs will still display the total charge output current as a percentage of the maximum rated charge current and NOT as a percentage of the limited charge current. One or two LEDs may flash intermittently in combination with a solid Fault LED (indicating a fault) or with a flashing Fault LED (indicating a warning). The icons above the LEDs represent the various types of fault and warning conditions.
Status LEDs	Displays the current status of the charger.
Full LED	A solid light indicates batteries are fully charged and the charger is in rest mode.

Item	Description
Charging LED	A solid light indicates the batteries are fully charged. A flashing light indicates the charger is performing a normal charge cycle.
Equalize LED	A solid light indicates that the charger is performing an equalization cycle. A flashing light indicates that the equalization cycle will begin after the absorption stage is done.
Fault LED	The LED may illuminate a solid light (indicating a fault) or flash intermittently (indicating a warning) in combination with flashing Charging Output (%) LEDs above to indicate what kind of fault. See *Troubleshooting on page 65* for details.
Charge Stages Select buttons	Quiet Mode Battery Type Press and hold the two select buttons until the desired Charge Stage LED is indicated by a solid light.

Item	Description
Charge Stages LEDs	2 Charge Stages 3 A solid light on either LED indicates which charging profile is used. Each setting optimizes the charging sequence differently in charging the batteries by stages. 1. **Three-stage [3]** - Bulk, Absorption, and Float; default setting 2. **Two-stage [2]** - Bulk and Absorption only
Quiet Mode select button	Quiet Mode Press and hold the Quiet Mode select button to activate Quiet Mode. Press and hold again to deactivate.
Quiet Mode LED	<5 A flashing light on this LED indicates that Quiet Mode is active. A solid light or no light indicates that Quiet Mode is not active.

Item	Description
Battery Type select button and LEDs	 Press and hold the button for three seconds then quickly release it to select one of five settings. An indicator LED corresponds to each setting. Each setting maximizes charger performance for its corresponding battery type. 1. **AGM** - Absorbent Glass Mat lead-acid battery 2. **LFP** - Lithium battery (Xantrex Battery); default setting 3. **GEL** - Gel-type lead-acid battery 4. **[FL]oode[D]** - Lead-acid battery 5. **Custom** **NOTE**: The fifth setting is a custom battery type setting and is indicated when all four LEDs illuminate. It is programmable to different voltages for Lithium battery.

Item	Description
Battery Temp. select button and LEDs	 Press and hold the button until the desired Battery Temp LED is indicated by a solid light. An indicator LED corresponds to each setting. 1. **[C]old** - for battery temperature below 5 °C (41 °F); raises the charging voltage to compensate. 2. **[W]arm** - for battery temperature between 5 and 30 °C (41 and 86 °F); default setting. 3. **[H]ot** - for battery temperature above 30 °C (86 °F); lowers charging voltage to compensate. If an optional BTS is connected, the indicator LEDs represent real-time battery temperature. When the optional BTS is not used, this selection changes the charger's output voltage settings to compensate for the battery temperature selected. The Cold setting raises the voltages, and the Hot setting lowers the voltages.

3 BASIC INSTALLATION

Please read this section for safety information and installation instructions regarding your TRUEcharge3. This section includes:

Preparing For Installation *12*
Tools and Materials *14*
Location *15*
Wiring Requirements *18*
Configuring Charge Current for Battery Size *22*
Installing the TRUEcharge3 Series Battery Charger *23*

NOTICE

GENERAL PRECAUTION

If parallel stacking two TRUEcharge3s to increase charging capacity, be sure to consult your battery manufacturer and battery specifications to avoid damaging the battery due to overcharging.

Failure to follow these instructions can result in equipment damage.

Preparing For Installation

⚠DANGER

ELECTRICAL SHOCK AND FIRE HAZARD

Installation must be done by qualified personnel to ensure compliance with all applicable installation and electrical codes and regulations. Instructions for installing the TRUEcharge3 Series Battery Charger are provided here for use by qualified personnel only.

Failure to follow these instructions will result in death or serious injury.

* Applicable codes in North America are the US National Electrical Code (NFPA 70) and Canadian Electrical Code (CSA C22.1) and the American Boat and Yacht Council (ABYC) standards and US Coast Guard Regulations (33CFR183, Sub Part I) for Marine installations in the USA.

⚠DANGER

HAZARD OF ELECTRIC SHOCK, EXPLOSION, BURN, OR ARC FLASH

- Apply appropriate personal protective equipment (PPE) and follow safe electrical work practices.
- This equipment must only be installed and serviced by qualified electrical personnel.
- Never operate energized with the wiring compartment cover removed.
- Energized from multiple sources. Before removing the wiring compartment cover - identify all sources, de-energize, and wait 2 minutes for circuits to discharge.
- Always use a properly rated voltage sensing device to confirm all circuits are de-energized.
- Batteries can present a risk of electrical shock, high short-circuit current, and exposure to gases and chemicals.
- Replace all devices, doors, and covers before turning on power to this equipment.

Failure to follow these instructions will result in death or serious injury.

Figure 7 Battery Connections

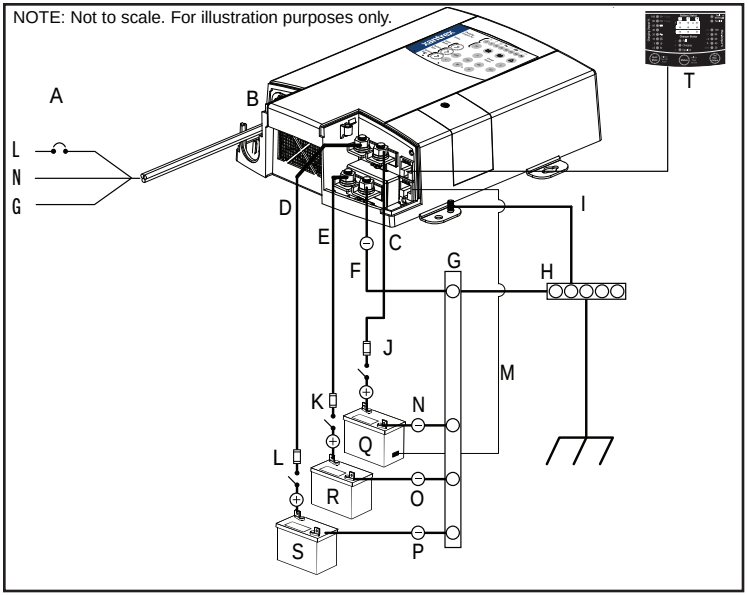

* single pole breaker for North America

A	AC (mains) source protected by correct size and type of branch rated circuit breaker*.	**K**	DC fuse or DC fused disconnect
B	AC compartment	**L**	DC fuse or DC fused disconnect
C	Battery cable from pos (+) terminal to **BAT3**	**M**	BTS connected to **BAT3**
D	Battery cable from pos (+) terminal to **BAT2**	**N**	**BAT3** cable from neg(-) terminal to common bus
E	Battery cable from pos (+) terminal to **BAT1**	**O**	**BAT1** cable from neg(-) terminal to common bus
F	Battery cable from neg(-) terminal to common bus	**P**	**BAT2** cable from neg(-) terminal to common bus
G	Engine Ground bus or DC neg(-) bus	**Q**	12/24V⎓**BAT3**
H	Ground common bus	**R**	12/24V⎓**BAT1**
I	Chassis DC ground terminal	**S**	12/24V⎓**BAT2**
J	DC fuse or DC fused disconnect	**T**	Optional remote panel

Tools and Materials

To mount and connect the TRUEcharge3 you need the following tools:

- 10 mm socket wrench and extension for the DC terminals and ground stud,
- Phillips screwdriver for removing and re-securing the AC and DC wiring compartment covers,
- power drill/screwdriver,
- drill bit set for pilot holes for mounting screws (if using #6 mounting screws, use 1/16 drill),
- wire stripper,
- manufacturer's recommended crimp tool for any crimp terminals that are being used.

You need the following materials:

- 3 conductor AC input wiring
  Use the information in *Step 4: Installing AC (Mains) Wiring on page 28* and your local electrical codes to determine the correct wire and breaker or fuse,
- AC cable strain relief (if the one included is not compliant with your local electrical code requirements),
- appropriately sized DC cables for each battery, with suitable connectors at the battery end,
- Use the information in *Step 3: Installing DC Wiring on page 26* and your local electrical codes to determine the correct wire and breaker or fuse,
- appropriately sized DC chassis ground (earth) cable with suitable connectors,
- ring terminals to fit 6 mm (1/4 in.) studs at the charger end (Marine grade hardware is recommended),
- DC fused disconnect or properly rated circuit breaker for each battery bank,
- mounting screws, M3 or #6 marine grade, corrosion resistant (4 pieces) (Length dependent on mounting surface).

Location

Install the TRUEcharge3 in a location that meets the following requirements:

Condition	Requirement
Dry	The TRUEcharge3 must be installed in a dry location not subject to moisture especially rain, spray, or splashing bilge water.
Clean	The TRUEcharge3 should not be exposed to metal filings or any other form of contamination.
Cool	The ambient air temperature should be between 0 – 50 °C (32 – 122 °F) for best performance.
Close to batteries	The TRUEcharge3 should be installed as close as possible to the batteries, but not in the same compartment to prevent corrosion. Avoid excessive cable lengths and use the recommended wire sizes. You must install with cables sized to achieve less than 3% voltage drop on battery cables under full load. This will maximize the performance of the charger.

Condition	Requirement
Ventilated	There must be at least 10 cm (4 in) of clearance on the top and bottom ends (A) of the TRUEcharge3 for air flow and at least 15 cm (6 in) of clearance on either side (B). Ventilation openings on the charger must not be obstructed. If the charger is mounted in a tight fitting compartment, the compartment must be ventilated with cut-outs to prevent the charger from overheating. 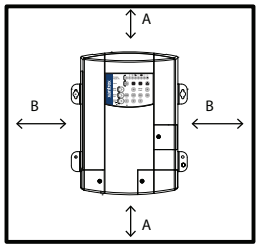

NOTES:

When planning to install the TRUEcharge3, be sure that you consider the location and orientation carefully. The TRUEcharge3 has an IP rating of IP32 (vertical only as shown in *Figure 8*). This rating means that it meets standards to prevent dripping water from entering the enclosure and causing shock hazard and damage to equipment.

The other possible mounting orientations will not prevent the entry of dripping water and therefore, not suitable for moist environments without the installation of additional drip protection. They are only acceptable for use in locations that are always dry.

The environment, therefore, will determine the mounting orientations that are suitable for each installation. Is the installation environment one that will always be dry or will moisture or condensation sometimes enter the area?

⚠DANGER

ELECTRICAL SHOCK HAZARD

- In moist environments, there is a likelihood that condensation will be present and may drip on to the charger. Use the appropriate mounting orientations as shown in *Figure 8* .
- Ventilation openings located at the top and bottom of the base mounting plate on the charger must not be obstructed. Ensure adequate ventilation is provided to prevent over-heating.

Failure to follow these instructions will result in death or serious injury.

Figure 8 Mounting Orientations

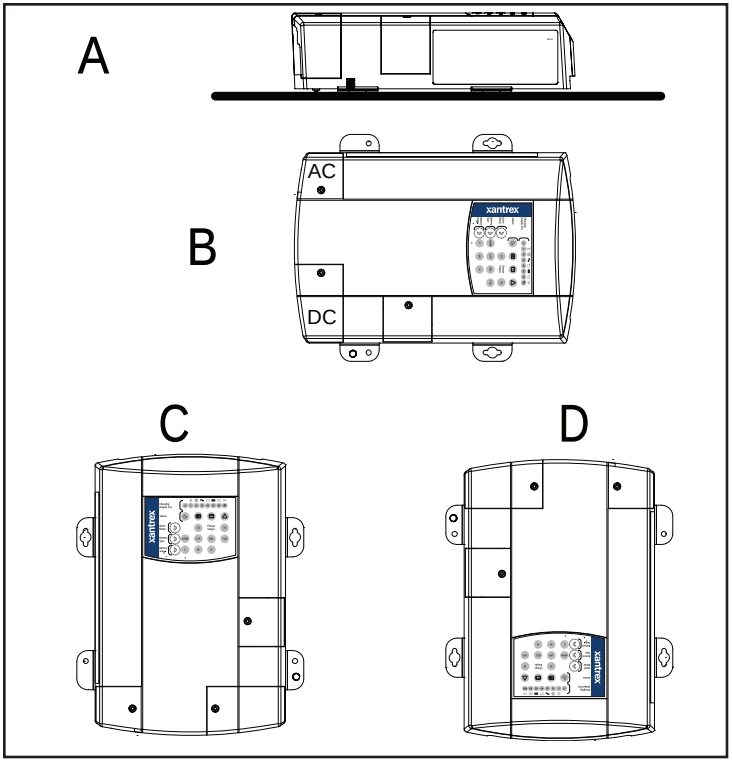

Deck Mount [A] (Wiring panel facing down) - this meets IP32 requirements and is drip-proof.

Horizontal Wall Mount [B] (with AC wiring higher than DC terminals only) - this orientation meets IP-32 requirements and is drip-proof.

Vertical Wall Mount (Rear panel facing down [C] or up [D]) - this orientation is allowed in locations that are always dry but is approved for marine installations only with additional drip protection.

Wiring Requirements

⚠DANGER

ELECTRICAL SHOCK AND FIRE HAZARD

Do not operate the battery charger with damaged or substandard wiring. Make sure that all wiring is in good condition and is not undersized. See notes below.

Failure to follow these instructions will result in death or serious injury.

NOTES:

Wiring and fuse sizes are governed by electrical codes and standards. Different requirements apply in different countries and to different types of marine installations, for example, commercial or recreational. It is the responsibility of the installer to ensure that each installation complies with all applicable codes and standards.

Ensure that wires and fuses or breaker disconnects are correctly sized. Maximum continuous DC current available from the charger may be an additional 6–10% above the nominal current rating of the charger.

DC Equipment Grounding

The equipment ground/earth cable size must not be smaller than one gauge size than the supply cable. For more information, see *To connect the DC chassis ground (earth): on page 25*.

DC (Battery) Wiring

The following tables show some typical wire sizes for various cable length runs, based on 3% voltage drop on DC cables, 75 °C (167 °F) rated wire with wiring being inside the engine compartment – assumed ambient of 50 °C (122 °F).

Table 1 Battery Cable Examples for 12VDC Models[a]

Wire Length (max length one way)		Wire Size (mm^2 and AWG)		
meters	**feet**	**804-1220-10**	**804-1240-10**	**804-1260-10**
1.5	5	6 mm^2 No. 10	10 mm^2 No. 8	16 mm^2 No. 6
2.25	7.5	6 mm^2 No. 10	16 mm^2 No. 6	25 mm^2 No. 4
6.10	20	16 mm^2 No. 6	35 mm^2 No. 2	50 mm^2 No. 1

a. Values based on American Boat & Yacht Council E-11 2018 Table 6A and Table 9.

NOTE: In the event of a conflict between the voltage drop table (Table 9) and the ampacity table (Table 6A) use the larger wire size.

Table 2 Battery Cable Examples for 24VDC Models[b]

Wire Length (max length one way)		Wire Size (mm^2 and AWG)		
meters	**feet**	**804-2410-10**	**804-2420-10**	**804-2430-10**
1.5	5	1.5 mm^2 No. 16	6 mm^2 No. 10	6 mm^2 No. 10
2.25	7.5	1.5 mm^2 No. 16	6 mm^2 No. 10	6 mm^2 No. 10
6.10	20	6 mm^2 No. 10	10 mm^2 No. 8	16 mm^2 No. 6

b. Values based on American Boat & Yacht Council E-11 2018 Table 6A and Table 9.

NOTE: In the event of a conflict between the voltage drop table (Table 9) and the ampacity table (Table 6A) use the larger wire size.

Over-current Protection Disconnect

Electrical codes require the DC circuit from each battery to the charger to be equipped with a disconnect and an over-current protection device, usually within 17.8 cm (7 inches) of each battery. The devices are usually DC-rated circuit breakers, fused disconnects, or a separate fuse and disconnect for each circuit. These devices must be rated for DC voltage and current and be rated to withstand the short circuit current available from the connected battery bank. Do not substitute devices rated only for AC voltage; they may not operate properly.

The current rating of the DC fuses must be correctly matched to the size of the DC wiring used, in accordance with the applicable codes. This helps to protect the installation against fire in case of any overcurrent or short circuit fault.

Table 3 Fuse Sizes versus Wire Sizes Based on ABYC Regulations

Max. Fuse/Breaker	mm^2	AWG
15A	2.5	14
20A	4	12
30A	6	10
50A	10	8
80A	16	6
100A	25	4
125A	35	2
150A	50	1

DC Chassis Ground

The DC chassis ground (earth) wire should also be sized correctly to provide proper protection. Refer to the local electrical codes for your specific installation to determine the correct gauge. The ABYC standards require this DC chassis ground wire to be the same size as the largest DC + and – conductors connected to the charger, or no more than one wire size smaller. See *Step 2: Connecting the DC Chassis Ground (Earth) on page 25* for instructions.

AC Wiring

⚠DANGER

FIRE HAZARD

Use only on circuits provided with 20A maximum branch circuit protection in accordance with local and national electrical codes*.

Failure to follow these instructions will result in death or serious injury.

* Applicable codes in North America are the US National Electrical Code (NFPA 70) and Canadian Electrical Code (CSA C22.1) and the American Boat and Yacht Council (ABYC) standards and US Coast Guard Regulations (33CFR183, Sub Part I) for Marine installations in the USA.

The AC mains wiring must be of sufficient size and it must be protected by the appropriate size and type of input breaker based on the jurisdiction and application. Some basic examples are given below.

The AC mains input wiring for the TRUEcharge3 should be a three-conductor cable, providing a ground, line, and neutral conductors (or G, L, N) in an outer jacket, rated a minimum of 75 °C, and sized based on the AC input current to the charger and on the value of overcurrent protection provided. See *AC Input Specifications on page 71* for more information.

For example:

- In US NEC, you may use a 14 AWG wire with a 15 A breaker for up to 12 A continuous current (or 12 AWG for a 20 A breaker for up to 16 A continuous current)
- Note that every jurisdiction will have different requirements as will each application, so research the regulations for your local jurisdiction to determine which wire size and type is correct based on the maximum AC input current marked on the chargers and given in *AC Input Specifications on page 71*.

Other examples of AC wiring requirements:

For marine applications, the American Boat & Yacht Council (ABYC) requires stranded wire, which is more robust than solid wire when exposed to vibration.

For RV applications, stranded wire is preferred because it can withstand vibration better.

Conductors and flexible cords shall be stranded copper for the marine environment.

The AC (mains) wiring supplying the TRUEcharge3 must be protected by the correct size and type of branch-circuit rated fuse or breaker to meet the applicable installation codes. If a fuse is used instead of a breaker, a correctly rated disconnect switch is required ahead of the fuse so that power can be turned off, allowing fuse replacement and safe maintenance of other equipment on the mains circuit.

Additionally, an AC junction box must be installed next to the TRUEcharge3. See *Figure 9* below.

Figure 9 Junction box placement

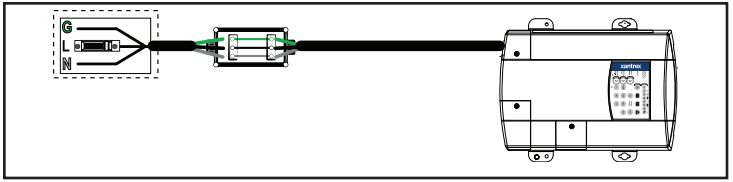

The top picture is typical in North American applications.

Configuring Charge Current for Battery Size

The TRUEcharge3 is designed to work with a minimum battery bank size. Each bank should meet the minimum Ah rating shown in *Table 4*. These minimum values are based on twice the charger's rated maximum charging current.

The TRUEcharge3 features an adjustable charger current between 5 to 120A. Remember to always adjust the charger current based on the battery size to ensure a proper charging of the battery. For example, a 20-amp charger will charge a minimum 40 Ah battery. If you are considering new batteries, please consult the battery's manufacturer for their recommendation based on the maximum charging current of your charger.

NOTE: If the battery manufacturer has specified the maximum charge current, please follow their recommendation.

Table 4 Recommended Minimum Battery Size

Model Number	Battery Bank Size (Ah)
804-1220-10	40
804-1240-10	80
804-1260-10	120
804-2410-10	20
804-2420-10	40
804-2430-10	60

Installing the TRUEcharge3 Series Battery Charger

Be sure to read the safety guidelines and pay attention to all cautions and warnings throughout the installation procedure. The installer is responsible for ensuring compliance with the installation codes for your particular application. See CAUTION statement under *Preparing For Installation on page 12*.

⚠DANGER

ELECTRICAL SHOCK HAZARD

Disconnect all sources of AC mains and DC power before proceeding.

Failure to follow these instructions will result in death or serious injury.

Installation Sequence

To make charger installation quick and easy, perform the installation tasks in the following sequence:

- *Step 1: Mounting the Battery Charger*
- *Step 2: Connecting the DC Chassis Ground (Earth) on page 25*
- *Step 3: Installing DC Wiring on page 26*
- *Step 4: Installing AC (Mains) Wiring on page 28*
- *Step 5: Powering Up on page 31*

Step 1: Mounting the Battery Charger

Mount the TRUEcharge3 using all four mounting slots and holes which are provided. Mounting orientations a) and b) *on page 17* meet IP-32 and drip-proof requirements that are needed to ensure safety in the presence of condensation. The other possible mounting orientations c) and d) shown in *Figure 8 on page 17* will not prevent the entry of dripping water, and are not suitable for use in marine installations or other moist environments without the installation of additional drip protection. They are only acceptable for use in locations that are always dry.

To mount the TRUEcharge3 Battery Charger:

1. Select a mounting surface that is flat and allows for a minimum of 10 cm (4 in.) of clearance on the top and bottom ends for air flow and at least 15 cm (6 in.) of clearance on either sides (see *Location on page 15*).
2. Drill the four pilot holes for the mounting screws, taking care that there is nothing behind the surface that can be damaged by the drill.
3. Mount the TRUEcharge3 Battery Charger using corrosion resistant,3 mm (#6) round, pan head (or similar) screws. The top two keyhole-style mounting holes can be used to hold the TRUEcharge3 Battery Charger in place while fastening the bottom two screws. For secure, permanent mounting, use the holes in all four mounting flanges and fasten all four screws. Do not rely on screws only in the keyhole slots for the installation of the charger.

Step 2: Connecting the DC Chassis Ground (Earth)

⚠ WARNING

ELECTRIC SHOCK HAZARD

Never operate the TRUEcharge3 without properly connecting the equipment ground/earth. A shock and energy hazard could result from improper grounding/earthing.

Failure to follow these instructions can result in death, serious injury, or equipment damage.

NOTE: Have an electrician install a properly grounded circuit if one is not available.

The TRUEcharge3 Battery Charger must be connected to a grounded, metal, permanent wiring system, or an equipment-grounding conductor should be run with the circuit conductors and connected to the equipment-grounding lead on the charger. Connections to the battery charger must comply with all local and application-specific codes and ordinances.

Xantrex recommends that you install a DC chassis ground (earth) wire from the ground stud on the TRUEcharge3 Battery Charger to the engine bus or DC ground bus. The DC chassis ground (earth) wire should be sized correctly with the power conductors, and both must be sized for the battery fuses that are used to protect the DC wiring. Refer to your local electrical codes to verify the requirements in your jurisdiction for your application.

To connect the DC chassis ground (earth):

1. Locate the ground stud on the TRUEcharge3 Battery Charger.
2. Connect the DC chassis ground (earth) from the ground stud to the ground bus. See *Figure 7 on page 13*.
3. Use a flat washer, lock washer, and nut (included in the installation kit) to secure the connection.
4. Tighten the nuts to 2.3 N-m (20 lb-in.) torque and test that the wire is secure. Do not over-tighten as this may result in damage to the charger.

Step 3: Installing DC Wiring

The procedure for installing the DC wiring applies to a single battery, as well as multiple batteries or battery banks.

⚠WARNING

ACCIDENTAL SHORT OR SPARK HAZARD

Leave the DC disconnects or breakers in the Off position or DC fuses removed from their fuse holders until installation is complete.

Failure to follow these instructions can result in death, serious injury, or equipment damage.

1. Remove the DC compartment cover. See *Front Panel on page 6*.
2. Plan the route that the DC wires will follow, keeping it as short as possible. Measure and cut the required wire length, after allowing some extra length for connections and to provide slack in the wires for strain relief.
3. Identify the positive cables, by using color-coded wire, or by marking both ends of the cable with colored tape, or similar kind of marking. Repeat with a different color for the negative. Most installation codes recommend coloring the positive red and the negative black.

IMPORTANT: You may find it helpful to label each cable, associating it with the battery bank it is connected to. For example, NEG (–), BAT1, BAT2, and so on.

4. Install a DC circuit breaker or a DC fused disconnect in each positive cable that is as close to the battery positive terminal as possible.
   Consult your local electrical codes regarding the distance allowed between the battery and the fuse or breaker. Be sure the breaker or fused disconnect is open.
5. Route the wiring to the batteries and to the TRUEcharge3. Avoid routing wiring through an electrical distribution panel, battery isolator, or other device that will add voltage drops.

⚠WARNING

SHOCK HAZARD

The rubber boots must be installed over the TRUEcharge3 DC terminals to keep water off of live parts and to maintain the charger's IP-32 and drip-proof ratings.

Failure to follow these instructions can result in death, serious injury, or equipment damage.

6. Insert and slide the rubber boot(s) over the charger end of the DC battery cables.

Figure 10 Installing rubber boots

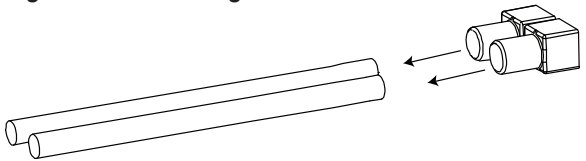

7. Install crimp lugs on the charger end of the DC battery cables using the crimp manufacturer's instructions and tool.

Figure 11 Crimping lugs on the cables

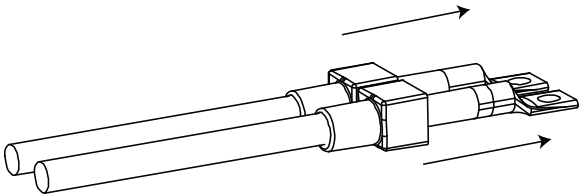

NOTICE

REVERSE POLARITY DAMAGE

Before proceeding to the next step, carefully check the wiring polarity. Do not reverse the connections. See note below.

Failure to follow these instructions can result in equipment damage.

NOTE: Make sure the positive terminals of the TRUEcharge3 will be connected to the correct terminal of the DC circuit breaker or a DC fused disconnect and from there to the positive terminal of the battery. Make sure the negative terminal of the TRUEcharge3 will be connected to the battery negative terminal (or DC negative bus). Connect the negative cable to the negative DC terminal on the charger.

8. Connect the negative cable from the negative terminal on the battery to the negative DC terminal on the TRUEcharge3.

   For one battery or bank

   Connect the negative cable from the negative terminal on the battery to the negative DC terminal on the TRUEcharge3 Battery Charger.

   Use a flat washer, lock washer, and a nut (five of each included in the installation kit) to secure the connection.

   For more than one battery or bank

   Connect the negative cable from the negative terminal on the negative ground bar or bus to the negative DC terminal on the TRUEcharge3 Battery Charger.

   Use a flat washer, lock washer, and a nut (five of each included in the installation kit) to secure the connection.

9. Tighten the nuts to 2.3 N-m (20 lb-in.) torque and test that the wire is secure. Do not over-tighten as this may result in damage to the charger.
10. Connect each positive cable to the correct positive DC terminal on the TRUEcharge3 Battery Charger.
    Use a flat washer, lock washer, and a nut (five of each included in the installation kit) to secure the connection.
11. Tighten the nuts to 2.3 N-m (20 lb-in.) torque and test that the wire is secure.
12. Connect the free end of each positive cable assembly to the correct positive terminal of the battery, using sufficient torque as recommended by your battery manufacturer.

⚠DANGER

EXPLOSION AND/OR FIRE HAZARD

This final connection of the DC battery circuit will likely generate an arc. Ensure all areas of the system, including batteries and engine compartments, are well ventilated prior to making this connection.

Failure to follow these instructions will result in death or serious injury.

13. Connect the free end of the negative cable to the negative terminal on the battery, using sufficient torque as recommended by your battery manufacturer.
    NOTE: If you are using more than one battery, you will need to connect the negative cable from each of the batteries to the negative ground bar or bus. The negative ground bar or bus will then have a single negative cable connecting to the negative charger terminal.
14. Secure cables in place using tie-wraps or cable straps according to electrical codes.
15. Slide the rubber boots to cover the DC terminals.
16. If available, route the optional battery temperature sensor (BTS) from the battery (one which is located in the warmest ambient temperature) to the charger location.
17. Proceed to *Step 4: Installing AC (Mains) Wiring*.

Step 4: Installing AC (Mains) Wiring

Before connecting AC (mains) wiring, make sure the AC (mains) source circuit is protected by a breaker switch of the correct size and type, to comply with the electrical code for your location and application. The current rating of the input breaker should not be larger than 20 A for 120 VAC applications and 10 A for 230 VAC applications, but may be required to be lower depending on the wire size used.

⚠DANGER

ELECTRICAL SHOCK HAZARD

Disconnect the AC (mains) source by turning off the breaker feeding the circuit, unplugging from shore power and disconnecting any other power sources (such as a generator).

Failure to follow these instructions will result in death or serious injury.

To connect AC supply wires:

1. Plan the route that the AC supply wiring will follow from the source (usually an AC distribution panel) to the TRUEcharge3.
2. Measure and cut the required length of three-conductor (G, L, N) cable allowing some extra length for connections and providing some slack [150 mm (6 in.) suggested].
3. Route the AC supply wiring from the charger (in its mounted position) to the source.
4. Unscrew the wiring compartment cover from the left rear of the TRUEcharge3 Battery Charger to expose the AC wiring access hole and charger's AC pigtail leads.

Figure 12 Remove cover

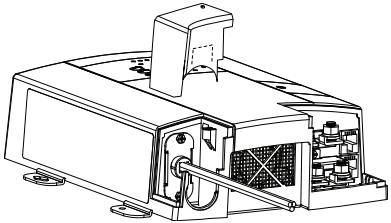

5. Carefully remove 50 – 75 mm (2 – 3 in.) of the outer jacket from the AC supply wiring, being careful not to cut or nick the insulation on the individual conductors.
6. Extend the charger's AC (L, N, gnd) pigtail leads (wires) from the AC wiring compartment of the charger.
7. Feed the AC supply wiring through the wider end of strain relief and out the tapered end.

Figure 13 Strain-relief

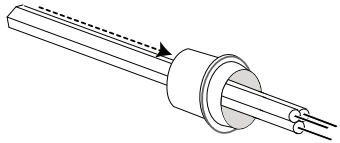

8. Slide the strain relief on the jacket of the wiring (not on the individual conductors) approximately 25 mm (1 in.) from the end of the jacket.
9. Connect the AC supply wires to the TRUEcharge3 Battery Charger pigtail wires.
   NOTE: Connect the line conductor to the AC line, the neutral to the AC neutral, and the ground to the AC ground. The wires are color coded as follows:

Table 5 AC supply wires

Conductor	AC Supply Wire Color Code
Ground/Earth	Green/green with yellow stripe
Line	Black/brown
Neutral	White/silver/light blue

To connect AC wires with the provided crimp-on butt-splice connector:

a. Make the connections using the provided crimp-on connectors or with other approved connectors required by your code, and suitable for your installation.

   For example, the ABYC Standards and Recommended Practices for Small Craft prohibit twist-on connectors for AC connections on a boat. For other types of installation, refer to your applicable code.

⚠DANGER

FIRE HAZARD

Improperly connected wires may overheat. Exercise care when using any crimp connector, use the tool specified by the crimp connector manufacturer, and follow all crimping instructions.

Failure to follow these instructions will result in death or serious injury.

b. Using a wire stripper, carefully strip 10 mm (3/8 in.) from the ends of the two wires being connected.

c. Insert one wire into one end of the butt-splice, until the insulation hits the internal metal crimp section, insert the butt-splice into the crimper, and crimp firmly. The proper location for the crimp is approximately 1.6 mm (1/16 in.) past where the butt-splice insulation tapers down.

Figure 14 Wire stripping

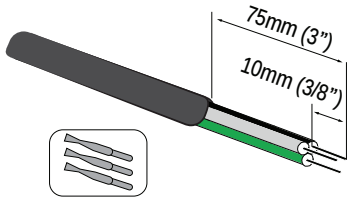

d. Repeat Step c for the other end of the butt-splice.

10. When all connections are completed, push the wiring and connectors inside the AC wiring compartment.
11. Place the strain relief on the AC wiring access hole.
12. Install the wiring compartment cover to fasten the strain relief and tighten the screw on top to secure the cover. Do not over-tighten.

Figure 15 Replace cover

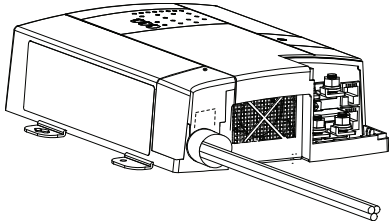

13. If applicable, install the optional remote panel.
14. Connect the AC supply wiring from the charger to the AC panel feeding the charger.

15. Connect the line conductor to the breaker, the neutral to the neutral bus, and the ground to the ground bus.
16. Secure cables in place using tie-wraps or cable straps according to electrical codes.

Step 5: Powering Up

Make one last check that all connections are correct and secure. The TRUEcharge3 may now be powered up.

1. Close the DC disconnect switch or breaker.

⚠DANGER

EXPLOSION AND/OR FIRE HAZARD

The final connection of the DC battery circuit will generate an arc. Ensure all areas of the system, including batteries and engine compartments, are well ventilated prior to making this connection.

Failure to follow these instructions will result in death or serious injury.

2. Switch the AC (mains) power on at the source breaker. It is normal to see a seven to ten second delay while the charger powers up. During this time, the indicator LEDs on the display panel will illuminate for a second (power on test) before reporting charging and battery status information.

NOTE: Battery qualification may not be correctly performed if AC power is switched on first.

NOTE: The onboard status LEDs will also illuminate momentarily with DC power alone when DC power is applied and the minimum battery voltage (that is, the connected batteries) is above 9 V.

Installing a Parallel Configuration

A parallel configuration is when two TRUEcharge3 Series Battery Chargers are coupled together to increase the output capacity. For example, a 40-amp TRUEcharge3 can be connected with another 40-amp TRUEcharge3 for a combined 80-amp capacity charger. This configuration is possible only with the use of the optional remote panel.

NOTICE

DAMAGE TO THE BATTERY CHARGER

Do not parallel TRUEcharge3 Series Battery Chargers together without a TRUEcharge3 Remote Panel (PN: 808-8040-10).

Failure to follow these instructions can result in equipment damage.

Parallel configuration can only be done when the following conditions are met:

- Two TRUEcharge3 Series Battery Chargers must have the same output voltage rating. Never parallel a 24-volt charger with a 12-volt charger.
- Both TRUEcharge3 Series Battery Chargers must connect to a TRUEcharge3 Remote Panel.
- Both TRUEcharge3 Series Battery Chargers must be correctly installed.

Installing a parallel configuration:

1. Follow the installation sequence (from steps 1 through 4) for a single unit - *Installation Sequence on page 24*.
2. In *Step 4: Installing AC (Mains) Wiring on page 28*, ensure that the two AC input lines are connected to the same circuit branch by using a double-pole breaker, so both lines share a common circuit breaker.
3. Designate a primary charger and a secondary charger between the two chargers. Remember that only the primary

charger or remote panel can be used to configure and operate the parallel system.

4. Connect the primary charger's battery bank 1 to the secondary charger's battery bank 1. Do the same for battery banks 2 and 3.
   NOTE: A maximum of three battery banks can be connected to a parallel-configured charger system.
5. Leave any unused DC output/s unconnected.
6. Connect the remote panel's communications cable to the primary charger's remote port and to the remote panel's Primary port (labeled). Connect a second communications cable to the secondary charger's remote port and to the remote panel's secondary port (not labeled). See *Figure 16* .
7. Connect the BTS (or battery temperature sensor's) cable plug to the primary charger's BTS port. Then connect the BTS's sensor to the battery.
   NOTE: If you have two BTSs, you may connect the two separate cable plugs to each of the battery chargers' BTS ports. You may then connect each of the sensors to two separate batteries. However, during operation, the BTS that is detecting a higher temperature will be used for battery temperature compensation.

Figure 16 Connecting the communications cables

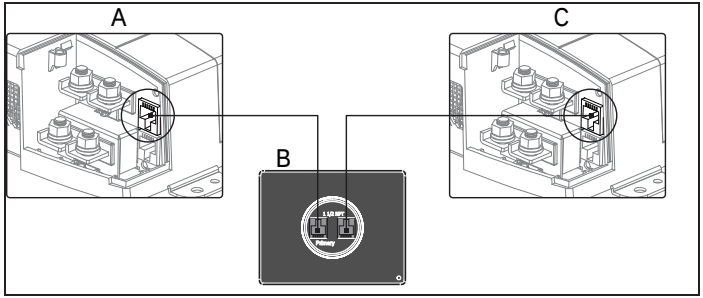

Item	Description
A	**Primary charger** - remote port shown.
B	**Remote back panel** - two communication ports are available. First port on the left is labeled Primary. The second port on the right is not labeled.
C	**Secondary charger** - remote port shown.

Powering up after installing a parallel configuration:

1. Follow the procedures in *Step 5: Powering Up on page 31*.
2. Observe that the Parallel LED on the remote panel lights up to indicate that two chargers are in parallel configuration charging mode.

During Charging

The two TRUEcharge3 Battery Chargers' output currents are synchronized during most of the charging cycle. When a battery is approaching a fully charged state, it is normal to see one charger's output current drop down earlier than the other charger. The output current displayed via the remote panel lights is the sum of both chargers' output currents divided by the total maximum current ratings of both chargers.

When Configuring the Battery Chargers

The secondary charger's configurations are automatically synchronized with the primary charger. The configuration can be performed from either the remote panel or the primary charger's onboard display. Follow the exact same procedures as a single charger when configuring the paralleled chargers.

When Equalizing Batteries

Equalization can be programmed and canceled through the remote panel. Equalization can also be canceled on either charger's onboard display.

Fault and Warning Conditions

When one charger encounters a fault condition, the other charger remains charging but the remote panel will stop synchronizing the two chargers' settings at this point. The remote panel will display the fault condition via Fault/Warning LED the same way as the "faulty" charger displays it on its onboard display.

Remote panel's Fault/Warning LED only clears when fault or warning conditions at both chargers are cleared. The remote panel will resume synchronizing the two chargers' settings at this point.

Exiting parallel operation:

Once the remote panel enters parallel operation, the only way to exit out of it is to completely power down the remote panel by unplugging both of the communication cables.

4 BATTERY CHARGER OPERATION

Please read this section for safety information and operational instructions regarding your TRUEcharge3. This section includes:

Input Voltage Operating and Derating *36*
Multi-Stage Charging *37*
Three-Stage Charging *38*
Two-Stage Charging *39*
Quiet Mode Charging *40*
Charging Voltage Setpoints *40*
Battery Qualification *41*
Temperature Considerations *41*
Setting the Battery Temperature without a BTS *41*

Battery installation should always be treated like a brand new installation. This means that all safety and precautionary guidelines that were followed prior and during the installation of the battery charger, must again be followed in order to avoid risks of electrical shock, injury, or death.

⚠DANGER

ELECTRICAL SHOCK HAZARD

Disconnect both AC and DC power from the battery charger before attempting to replace old, defective, or brand new batteries.

Failure to follow these instructions will result in death or serious injury.

To replace an old battery:

1. Turn off the AC source by disconnecting the AC line and/or opening the AC source disconnect.
2. Switch off all devices operating from currently installed batteries.
3. Disconnect the battery cables from the old battery.
   NOTE: For Negative chassis systems, disconnect the negative cable first, then the positive cable.
   For Positive chassis systems, disconnect the positive cable first, then the negative cable.
   Inspect all AC and DC cables for damage and repair, if necessary.

4. Replace the old battery with the new battery.
5. Reconnect the battery cables to the new battery.

   NOTE: For Negative chassis systems, reconnect the positive cable first, then the negative cable.
   For Positive chassis systems, reconnect the negative cable first, then the positive cable.

   IMPORTANT: If the new battery is different from the old one in chemistry, temperature, or size, remember to re-configure the battery settings accordingly. See *Setting the Battery Temperature without a BTS on page 41* and *Configuring the Battery Type on page 44*.

Input Voltage Operating and Derating

When AC input is within the lower range between 90–108 V∼, the TRUEcharge3 derates to 80% of maximum current.

However, when AC input increases above 108 V∼ up to 265 V∼, maximum current returns to 100% capacity. Furthermore, the TRUEcharge3 will continue to operate at 100% of maximum current.

Multi-Stage Charging

Most TRUEcharge3 Series Battery Charger models have three outputs that share the full rated current enabling it to charge three different batteries or battery banks that either have the same chemistry or can tolerate the same charge sequence and thresholds. The TRUEcharge3 can perform either three-stage charging (Bulk, Absorption, and Float) or two-stage charging (Bulk and Absorption).

The battery banks are not galvanically isolated from each other. They share a common negative as shown in the diagram below.

The negative bus to chassis connection as shown below may not be suitable in some applications.

Figure 17 Typical Three-Battery Installation

NOTE: Not to scale. For illustration purposes only.

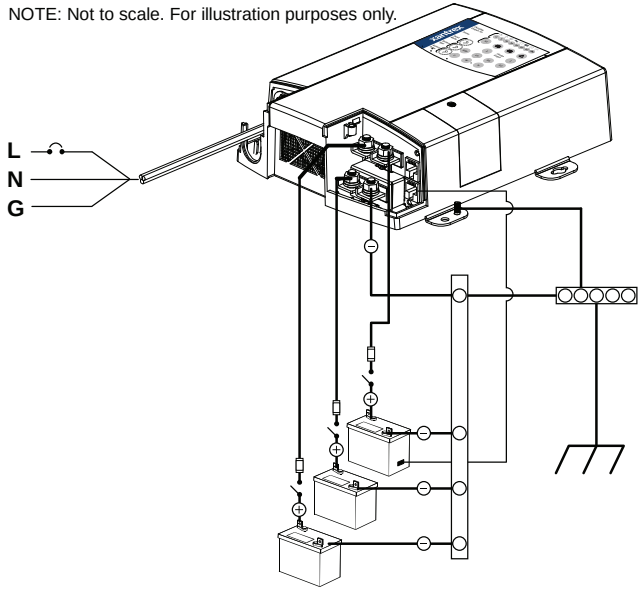

Three-Stage Charging

The three-stage charging mode employs the following sequence: ***Bulk, Absorption, and Float***. During the Bulk stage the batteries are accepting a constant maximum current. In the Absorption stage, the battery voltage is held constant and the current declines. Finally, in the Float stage, the charger continues to provide voltage at a lower level to maintain the battery in a fully charged state. If there is no load on the battery, it will typically draw very little current. The charger, however, is able to provide current to its full rating to power auxiliary DC loads on the battery.

The charger will restart the charging cycle in the Bulk stage if the lowest battery voltage of the three banks drops below 12.5 V (12 VDC chargers) or 25 V (24 VDC chargers) for 15 minutes. After seven days, the charger will automatically restart charging in order to refresh the batteries.

Figure 18 Three-Stage Charging Process

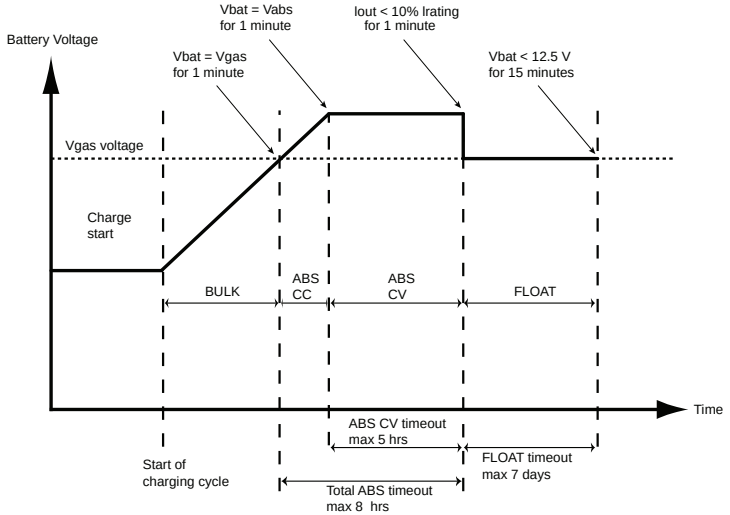

Two-Stage Charging

The two-stage charging mode employs the following sequence: ***Bulk and Absorption***. It runs similar to the three-stage sequence except that there is no float stage; after the absorption stage the charger stops providing current to the battery and the charger output drops to 0 V. In this manner, DC loads draw power supplied by batteries and the charger enters a “rest or standby stage.” Like the three-stage sequence, the charger will restart the charging cycle in the Bulk stage if the lowest battery voltage of the three banks drops below 12.5 V (12 VDC chargers) or 25 V (24 VDC chargers) for 15 minutes. After seven days, the charger will automatically restart charging in order to refresh the batteries.

Figure 19 Two-Stage Charging Process

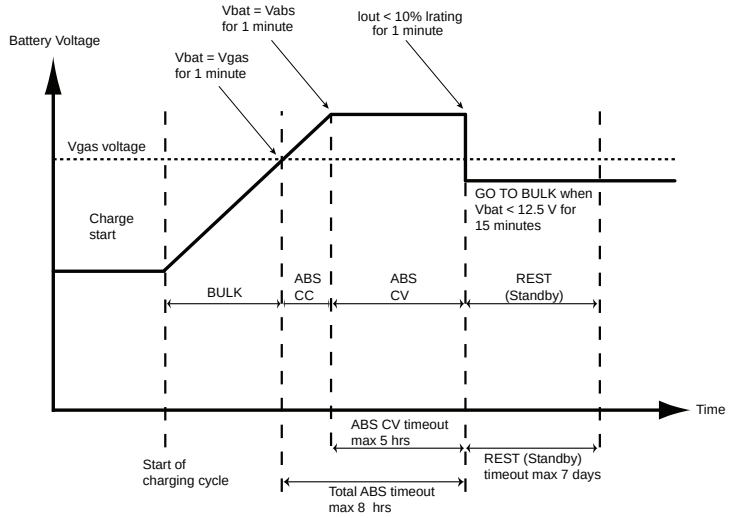

Quiet Mode Charging

Quiet mode capability allows the charger to charge the batteries efficiently in virtual silence without fan noise by derating charging power.

When enabled, the TRUEcharge3 will operate continuously for 9 hours without the fan unless manually disabled.

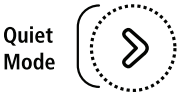

Press and hold the Quiet Mode select button to enable Quiet Mode. Press and hold again to disable.

A flashing light on this LED indicates that Quiet Mode is active. A solid light or no light indicates that Quiet Mode is not active.

Quiet Mode can also be enabled/disabled from the optional Remote Panel (PN: 808-8040-10).

Charging Voltage Setpoints

The TRUEcharge3 charging process is designed to make the battery or battery banks reach the following voltage setpoints.

Table 6 Charging Maximum Voltages

Battery Type		Absorption (12 | 24 Volts)	Float (12 | 24 Volts)	Equalization (12 | 24 Volts)
AGM	AGM	14.3 | 28.6	13.4 | 26.8	not applicable
LFP	$LiFePO_4$	14.6 | 15.2	13.4 | 26.8	not applicable
GEL	GEL	14.2 | 28.4	13.8 | 27.6	not applicable
FLD	Flooded	14.4 | 28.8	13.5 | 27.0	16.0 | 32.0
AGM LFP GEL FLD	Custom	13.8 | 27.6 (default, changeable)	13.4 | 26.8 (default, changeable)	not applicable

Battery Qualification

The TRUEcharge3 Series Battery Charger will perform a battery qualification on each application of AC (or DC > 9 V [for 12-volt batteries]; DC > 18 V [for 24-volt batteries]), to determine if battery banks are present and healthy.

To force a battery detection sequence,

1. Turn off AC and DC.
2. Wait approximately 20 seconds or until all lights on the charger or remote have gone out.
3. Turn on DC.
4. Turn on AC.
   The charger will then perform a battery detection.

The TRUEcharge3 Series Battery Charger charges all banks at the same time but the bank in most need of charging is the one that receives the most charge. For example, if Bank 1 and Bank 2 are both charged, but Bank 1 has a load and Bank 2 does not, then the charger may rarely charge Bank 2.

Temperature Considerations

The optional Battery Temperature Sensor (BTS) protects your battery and improves charging accuracy. Attach the BTS to the warmest battery.

If no BTS is connected, the charger defaults to the Battery Temp. selection on the onboard display as well as on the optional remote panel.

Setting the Battery Temperature without a BTS

NOTICE

RISK OF BATTERY DAMAGE

Do not set a battery temperature that is lower than the actual temperature in the absence of a BTS as this may cause the battery to be overcharged.

Similarly, do not set a battery temperature that is higher than the actual temperature in the absence of a BTS as this may result in under-charging the battery.

Failure to follow these instructions can result in equipment damage.

NOTE: Always be aware of the temperature setting, observe the battery's actual temperature and adjust the Battery Temperature setting accordingly. For varying conditions, use the Warm setting.

To configure the battery temperature:

NOTE: By default, the Battery Temp. is set to Warm.

1. Press and hold the Battery Temp. Select button for three seconds to advance to the next setting.
2. Select the appropriate battery temperature setting.
   The LEDs will indicate which of the three types is being selected: Warm, Hot, or Cold.

NOTE: See *Table 7* to see how output voltage is offset by varying the temperature selection.

Table 7 Battery Temperature Compensation Levels

Temperature Selection	Recommended for battery temperature of:	Voltage added for temperature compensation offset from 25 °C	
Cold	below 5 °C (41 °F)	Flooded/AGM /Gel	0.675
Warm	between 5 and 30 °C (41 and 86 °F)	Flooded/AGM /Gel	0
Hot	above 30 °C (86 °F)	Flooded/AGM /Gel	–0.27

5 CONFIGURATION

This section includes descriptions on how to change charger settings of the TRUEcharge3 Series Battery Charger using the optional Remote Panel (PN: 808-8040-10). If you do not connect the accessory, you can only configure a few charger settings from the *Onboard Status LED Panel on page 8*. This section includes:

Configuring the Battery Charger ***44***
Configuring the Charger Stage *44*
Configuring the Battery Type *44*

Configuring the Battery Charger

Once the charger is connected to at least one battery bank and to AC, it is live and it may be configured. The indicator LEDs on the onboard display will illuminate for a second (power on test) before reporting charging and battery status information.

Configuring the Charger Stage

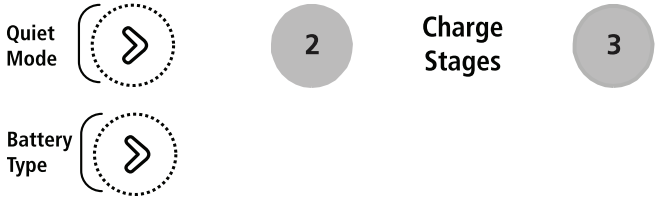

NOTE: By default, the Charger Stage is set to 3-Stage.

1. Press and hold the two select buttons until the desired Charge Stage LED is indicated by a solid light.
2. The LED will indicate which of the two Charger Stages is being selected: two-stage or three-stage (default).

Configuring the Battery Type

NOTE: By default, the battery type is set to LFP.

1. Press and hold the Battery Type Select button for about three seconds and then quickly release it to advance to the next setting.
2. Select the desired battery type.
   The LEDs will indicate which of the five types is being selected: **AGM**, **LFP** (default), **GEL**, **FLoodeD**, and Custom. The Custom setting is indicated when all four battery type LEDs are illuminated.

Configuring a Custom Battery Type

NOTE: Custom battery type is intended for other lithium batteries other than a Xantrex LFP Battery.

1. Using the steps above in *Configuring the Battery Type*, select Custom battery type.
2. Press and hold the Battery Type select button for more than five seconds and then quickly release it.

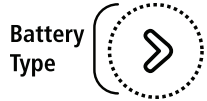

3. Notice that the following LED pattern will start to flash.

Figure 20 Absorb Voltage Setting LED Pattern

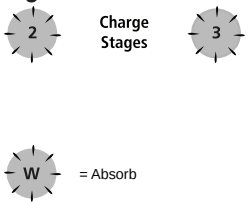

This LED pattern above allows you to modify the Absorb Voltage settings of the custom battery.

To modify the Float Voltage settings, press and hold the Battery Temp select button below until the LED pattern changes to the Float Voltage settings.

This LED pattern below allows you to modify the Float Voltage settings of the custom battery.

Figure 21 Float Voltage Setting LED Pattern

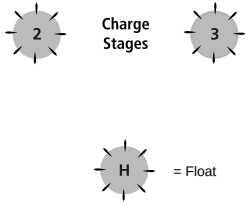

4. Notice also that one the following LEDs is illuminated which would correspond to a particular voltage setting in either Absorb or Float.

5. To change the voltage settings, press and hold the Battery Type select button for three seconds and then quickly release it. This will move to different voltage settings.

Table 8 Custom Voltage Settings

LED	Absorb Voltage	Float Voltage
<5	13.8	13.4
5	14.0	13.5
10	14.1	13.6
20	14.2	13.7
40	14.3	13.8
60	14.4	13.9
80	14.5	14.0
100	14.6	14.2

6. To save the new settings, press and hold the Battery Type select button for more than five seconds and then quickly release it.

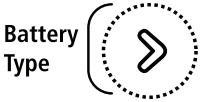

NOTE: After two minutes of inactivity, the Custom Voltage setting mode will terminate and none of the new settings will be saved.

6 OPERATION

This section includes descriptions of the different modes and settings of the TRUEcharge3 Series Battery Charger. This section includes:

Operating DC Loads *47*
Transitioning Power States *48*
Charging Batteries *49*
Equalizing Flooded Batteries *50*
Interpreting Charger Information *53*
Reading Onboard Display LEDs *53*
Indicator LEDs and Status Text on the Onboard Display Panel *54*
Interpreting Fault and Warning Indicators *56*
Reporting While Charging or Equalizing *59*
Reporting Without AC Power or While on Standby *59*
Using A Generator As Source Power *60*

Operating DC Loads

When the TRUEcharge3 Series Battery Charger is operating, DC loads such as fans and lights may vary in speed or intensity. This is normal. The TRUEcharge3 Series Battery Charger will not harm any load connected to it as long as the load can withstand the following maximum voltages:

- 16 V for 12-volt chargers,
- 32 V for 24-volt chargers.

Transitioning Power States

There are two ways to turn ON the TRUEcharge3 Series Battery Charger:

- Connect the batteries to the charger (i.e., charger is on standby) then connect AC power at the source. If the batteries are not fully charged then charging begins immediately. If the batteries are fully charged then charging will go to either standby (two-stage) or float (three-stage).

  Or,

- Press on/standby on the optional remote panel while batteries and AC power are both connected to the charger (from Standby).
  The charger begins to charge the batteries from Standby.

There are two ways to put the TRUEcharge3 Battery Charger in Standby:

- Disconnect AC power at the source (i.e., only the batteries are connected) or
- Press on/standby on the optional remote panel while batteries and AC power are both connected to the charger (from ON).
  The charger stops charging but continues to monitor the batteries.

⚠DANGER

ELECTRICAL SHOCK HAZARD

- Do not disassemble the battery charger. Internal capacitors remain charged for five minutes after all power is disconnected.
- Disconnect both AC (mains) and DC power from the battery charger before attempting any maintenance or cleaning or working on any circuits connected to the battery charger. See note below.

Failure to follow these instructions will result in death or serious injury.

There is only ONE way to safely turn the TRUEcharge3 Series Battery Charger off (Disable):

- Disconnect the AC power at the source and disconnect all DC batteries.

This is the only state where the TRUEcharge3 Series Battery Charger is completely de-energized.

When the TRUEcharge3 Series Battery Charger is disabled, the optional remote panel is inactive.

Charging Batteries

Before you start to charge batteries read the *Important Safety Instructions on page vii* and follow all safety precautions when working with batteries.

The charger can be in any of the different modes below which are also indicated on the onboard display's indicator LEDs and the battery bank's status (see *Onboard Status LED Panel on page 8*):

- Bulk
- Absorption
- Float
- Equalize (in progress)
- Equalize
  (waiting for absorption to end)
- Alert (Fault)
- Alert (Warning)

After charging is complete, the TRUEcharge3 enters into Float mode.

To charge your batteries:

1. If possible, disconnect any heavy loads on the batteries being charged, by opening disconnect switches or by switching the loads off.
2. Connect the batteries to the charger by closing the DC disconnect switches.
   NOTE: The onboard display LEDs will light up for a second.
3. Ventilate the area around the battery thoroughly during charging.
   Review the charging instructions supplied by the manufacturer of your batteries and follow all safety precautions and the required steps.
4. Apply AC (mains) power to the TRUEcharge3 by:
   - closing the AC (mains) breaker or
   - turning the generator on.
5. The onboard display LEDs will illuminate for one second (power on test) as the initialization sequence runs.
6. After initialization, the onboard display LEDs will display present status and settings. At this point, changes in Battery Type, Battery Temperature, and/or Charger Mode can then be applied.
7. These settings are stored in memory (even when all power sources are disconnected) and need not be re-entered after every initialization. During charging, the charger current, voltage, charging state, and battery level are shown on the onboard display LEDs. The charger fan may activate as well.
8. After charging is completed, reconnect all loads to the battery.

Equalizing Flooded Batteries

NOTICE

RISK OF BATTERY DAMAGE

The TRUEcharge3 will only equalize flooded lead-acid batteries. It does not enter equalization when other battery types are selected since they will be damaged by this process. Use the correct settings for your battery types.

Failure to follow these instructions can result in equipment damage.

NOTICE

RISK OF BATTERY DAMAGE

You must monitor the battery specific gravity throughout equalization to determine the end of the equalize cycle.

Failure to follow these instructions can result in equipment damage.

The TRUEcharge3 cannot automatically determine when to stop the equalization of a battery. The one hour time-out is intended as a safety feature to require the user to continually re-activate it as necessary after checking batteries manually, but may not be sufficiently short to prevent battery damage.

In the following conditions the TRUEcharge3 will not enter equalization mode:

- the battery type is set to GEL, AGM, LFP, or Custom
- any battery is not fully charged (all three battery banks must be charged to float or rest stage before equalization can be activated on any bank)[a]
- there is an active fault on the battery you are trying to charge

You must run a complete normal charge cycle on the batteries before you equalize them.

⚠DANGER

EXPLOSION HAZARD

The battery generates explosive gases during equalization. Follow all of the battery safety precautions listed in this guide.

Ventilate the area around the battery thoroughly using ventilators with brushless motors and ensure that there are no sources of flame or sparks in the vicinity.

Failure to follow these instructions will result in death or serious injury.

[a] In this case an equalization cycle can be programmed to start once the charge cycle is done.

Performing An Equalization

NOTICE

RISK OF EQUIPMENT DAMAGE

- Turn off or disconnect all DC loads on the battery during equalization.
- Do not equalize if the level of equalization voltage (see note below) does not comply with the battery manufacturer's recommendation.

Failure to follow these instructions can result in equipment damage.

NOTE: The voltage applied to the battery during equalization may be above safe levels for some loads but the absolute maximum is 16 V for 12-volt chargers and 32 V for 24-volt chargers within operational temperature range.

⚠WARNING

EXPLOSION, FIRE, AND BURN HAZARDS

Always wear proper, non-absorbent gloves, complete eye protection, and clothing protection. Avoid touching your eyes and wiping your forehead while working near batteries. See following note.

Failure to follow these instructions can result in death, serious injury, or equipment damage.

NOTE: If battery acid contacts skin or clothing, wash immediately with soap and water. If acid enters your eye, immediately flood it with running cold water for at least twenty minutes and get medical attention immediately.

To equalize your batteries:

IMPORTANT: Remember that all connected batteries will undergo the equalization. If only one bank is intended to undergo equalization then the other banks must be disconnected prior to equalization.

1. Check the battery electrolyte level. If necessary, refill with distilled water only. All the cells should have similar electrolyte levels. If the levels are widely different, it will influence the relative concentration of acid, thereby affecting the specific gravity measurements. If distilled water is added, batteries must undergo a complete charge cycle.
2. Program or initiate an equalize cycle. Equalization will begin if all banks are in either float or rest mode.

   NOTE: If equalization is programmed prior to float, equalization will start prior to reaching float.

3. By default, equalization is disabled. Consult your battery's user guide for information on whether equalization is allowed or not.
   a. Press and hold the two buttons below (*Figure 22*) to enable Equalization.
   b. Observe the Equalize LED (*Figure 23*) to make sure it is on before releasing the two buttons.

Figure 22

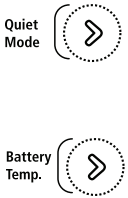

Figure 23

NOTE: The onboard display and remote panel buttons will not allow selection of equalization for other than the Flooded type .

4. Monitor the specific gravity of each cell of the battery during equalization with a battery hydrometer.
   NOTE: The equalization cycle is preset to last for one hour. It is not possible to program another equalization cycle when the present cycle has not ended yet.

   Carefully check the specific gravity of each cell and repeat the equalization cycle until they all meet the battery manufacturer’s specifications for specific gravity or until the specific gravity stabilizes relative to each other for an hour.

   The charger automatically exits equalization to float/no float mode or rest mode after one cycle. To manually exit equalization mode early, repeat Step 3.
5. Check the battery electrolyte level. If necessary, refill with distilled water only and repeat a normal charge cycle.

Interpreting Charger Information

The TRUEcharge3 provides information about the status of the charger and the batteries.

Reading Onboard Display LEDs

The Fault LED works in conjunction with the Charging Current (%) LEDs. The icons at the top row above the Charging Current (%) LEDs represent the various types of fault and warning conditions. For example, a temperature warning is represented by a thermometer icon.

The Charging Current (%) LEDs will normally illuminate as a solid progress bar when they are indicating the amount of output charging current. If any of the LEDs start to flash intermittently at the same time that the Fault LED is either solid or flashing, a fault or warning condition is indicated.

A warning condition notifies the user of an impending problem and will not stop the charger from charging, while a fault condition will stop the charger from charging the battery.

Figure 24 Charger and Battery Information

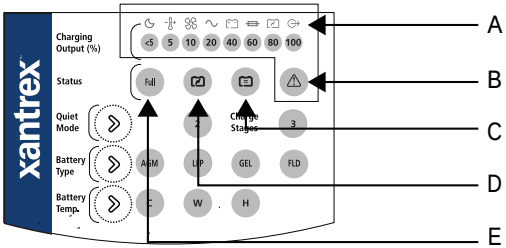

Item	Description
A	Type of fault and warning
B	Fault LED
C	Equalize LED
D	Charging LED
E	Full LED

Indicator LEDs and Status Text on the Onboard Display Panel

All indicator LEDs on the Onboard Display panel (and the optional remote panel, if installed) will illuminate for one second when AC or DC power is supplied to the TRUEcharge3.

The TRUEcharge3 will recover from alert conditions automatically when the cause of the alert has disappeared. Under a reverse polarity condition, the charging process will be stopped until further user action fixes the condition. See *Specifications on page 69* for more information on normal operating ranges.

To interrupt or cease the charging process, disconnect the AC power source from the charger.

Table 9 Charger Status LED Sequences

Charger Status LED Activity	Charger Status
Full LED illuminates solid	The charger is in float (or no float) mode of charging. All batteries have been fully charged.
LED illuminates solid	The charger is charging in bulk or absorption mode
LED flashes	The charger will perform an equalization cycle after the absorption stage.
LED illuminates solid	The charger is currently implementing an equalization cycle for all batteries.
LED flashes	A warning condition. See *Interpreting Fault and Warning Indicators on page 56*.
LED illuminates solid	A fault condition. See *Interpreting Fault and Warning Indicators on page 56*.

Interpreting Fault and Warning Indicators

An error alert is indicated by the TRUEcharge3 when the Fault LED illuminates a solid light (indicating a fault) or flashing intermittently (indicating a warning) in combination with a flashing LED of one of the following Charging Output (%) LEDs

5 10 20 40 60 80 100.

Table 10 Fault and warning indicators

Fault or WarningCondition			5	10	20	40	60	80	100	Solution
AC input out of range fault (<85 V or >265 V)		•			•					Check AC connections. Change to a more stable AC power source and check that the voltage and voltage frequency are within acceptable operating range. See *Specifications on page 69*.
High Battery Temp fault (>70°C for Flooded, GEL, AGM) (>50°C for LFP and Custom)		•	•			•				Check the batteries. Do not charge a battery that is rated other than 12 V nominal for all 12-volt chargers or 24 V nominal for all 24-volt chargers. Check that the battery type and temperature settings match the actual battery and its conditions. Disconnect or turn off other charging sources such as an alternator or the charger on a generator with an electric start. Allow the battery (or batteries) to cool to normal operating temperature. See *Specifications on page 69*.
Low Battery Temp fault (< -25°C for Flooded, GEL, AGM) (<0°C for LFP and Custom)		•	•			•				Check the batteries. Do not charge a frozen battery. Charging a frozen battery may present a risk of explosion. Check that the battery type and temperature settings match the actual battery. Allow the battery (or batteries) to warm up to a temperature that is above freezing before charging. See *Specifications on page 69*.

Fault or WarningCondition			5	10	20	40	60	80	100	Solution
High Battery voltage fault (>16.5V for 12-volt chargers) (>33V for 24-volt chargers)		•				•				Discontinue charging or disconnect AC power source from supplying power to the charger. Disconnect voltage sensitive DC loads from DC supply to prevent damage. If the DC bus voltage is still measuring high after AC power has been disconnected, call a qualified and certified electrician.
High Charger Temp fault		•	•					•		Allow the TRUEcharge3 Battery Charger to cool while the AC is connected so the fan stays on. Improve ventilation or install the charger in a cooler location.
Loss of Remote Connection warning	•								•	Reconnect the communication cable to the port. It takes about 15 seconds to re-establish communication.
Reverse Polarity Fuse fault		•					•			Check for reverse battery polarity (negative connected to negative, positive connected to positive is correct) at battery and charger output terminals. Disconnect AC and DC sources before replacing the fuse(s) on the charger. See *Replacing the Fuses on page 63*
Internal fault		•						•		Check that nothing is blocking the fan (between the DC output terminals and the AC wiring cavity). Carefully remove any obstruction when the charger is powered off.

Reporting While Charging or Equalizing

After configuring the charger and during charging, the onboard display panel (and the optional remote panel, if installed) will show the following information about the charger and the battery:

- Charging Output Current
- Charger Status
- Battery Status (available on the optional remote panel only)

If there is a fault or warning related to one of the banks, the fault or warning information will display in the form of illuminating or flashing fault indicator LEDs. Charging for all banks will stop and will only resume once the fault condition is cleared. However, charging will continue during warning conditions.

Reporting Without AC Power or While on Standby

If AC power has been disconnected or if you have used the optional remote panel to place the TRUEcharge3 Battery Charger on Standby mode, the onboard display (and the optional remote panel, if installed) LEDs will be turned off to conserve battery power. However, present settings and battery status can be viewed momentarily by pressing the Status button on the optional remote panel to initialize a view cycle that will show the status of the batteries.

The remote panel LEDs will turn off after 30 seconds of inactivity.

Using A Generator As Source Power

The TRUEcharge3 can be run from a regular AC (mains) power source or from an alternate AC power source such as a generator. Refer to *Specifications on page 69* for AC input current draw to determine the size of generator you need. Many generators provide output voltage that is modified sine wave or modified square wave rather than the true sine wave that the power utility provides.

If a generator needs to run on full load capacity to supply charging current to the battery via the battery charger, its output frequency and amplitude may become unstable. This scenario can cause the battery charger to shutdown. Adjusting the Maximum Charging Current setting can help avoid this scenario (using the optional Remote Panel (PN: 808-8040-10)).

The TRUEcharge3 may be used with modified sine wave generators but its lifetime may be reduced somewhat depending on the severity of any peak voltage overshoots and the severity of waveshape rise times.

7 TROUBLESHOOTING

This section will help you narrow down the source of any problem you encounter. This section includes:

Maintaining the Charger *62*
Replacing the Fuses *63*
Fuse Replacement Ratings *64*
Troubleshooting *65*

Maintaining the Charger

⚠DANGER

ELECTRICAL SHOCK HAZARD

Do not disassemble the battery charger. See note below.

Failure to follow these instructions will result in death or serious injury.

NOTE: The TRUEcharge3 Series Battery Charger does not have any user-serviceable parts. Do not disassemble the TRUEcharge3 except where noted for wiring and cabling. See your warranty for instructions on obtaining service. Attempting to service the TRUEcharge3 yourself may result in a risk of electrical shock or fire and void the warranty. Internal capacitors remain charged after all power is disconnected

The TRUEcharge3 contains solid-state electronic components that require no maintenance. The best care you can give the charger is to protect it from contact with liquids, spray, or fumes which may cause corrosion and by keeping the air intake vent clean and free from any obstructions.

- Disconnect all AC (mains) and DC power and clean the outside of the case and wiring with a damp cloth.
- Wear protective gloves, if you suspect it has come in contact with battery fluid, salt water, gasoline or oil, or other corrosive material.
- Do not operate if the charger contains moisture of any kind.
- Periodically, disconnect all AC (mains) and DC sources and check all DC and AC wiring connections to be sure they have not loosened or deteriorated.
- Also check all cable clamps to ensure they are tightly fastened.
- Loose battery terminals and lugs exposed to open air corrode rapidly. The corrosion appears as a white powder or granular foam on the terminals and any nearby exposed metal parts. If it contacts your skin, it will cause burns unless you rinse it off immediately.
- To clean battery terminals, follow the recommendations and procedures of the battery manufacturer.

Replacing the Fuses

NOTICE

IMPROPER INSTALLATION BY AN UNQUALIFIED INSTALLER

Installer must have knowledge and experience in installing electrical equipment, knowledge of the applicable installation codes, and awareness of the hazards involved in performing electrical work and how to reduce those hazards.

Failure to follow these instructions can result in equipment damage.

⚠DANGER

ELECTRICAL SHOCK HAZARD

- Disconnect all AC and DC sources to the charger and wait five minutes for internal voltage and energy levels to reduce to safe levels.
- Only replace fuses with the same type, ratings, and certifications.

Failure to follow these instructions will result in death or serious injury.

To replace the fuses:

1. Remove the charger's wiring compartment panel cover.
2. Pull out the blown fuse(s) gently, using a fuse puller, if available.
3. Install a brand new fuse(s) with same type and rating as the old one. See *Fuse location on page 64*.
4. Replace the wiring compartment panel cover.
5. Replace the charger's wiring compartment cover.
6. Reconnect all AC and DC sources to the charger.

⚠WARNING

ELECTRICAL SHOCK HAZARD

Replace the wiring compartment cover before turning on power to this equipment.

Failure to follow these instructions can result in death, serious injury, or equipment damage.

Fuse Replacement Ratings

NOTICE

RISK OF EQUIPMENT DAMAGE

For continued protection, replace only with Littelfuse® type 257 (or equivalent) with ratings as shown below.

Failure to follow these instructions can result in equipment damage.

Model Number	Amperage	Voltage
804-1220-10	30 A (green)	32 V
804-1240-10	2×30 A (green)	32 V
804-1260-10	3×30 A (green)	32 V
804-2410-10	15 A (blue)	32 V
804-2420-10	15 A (blue)	32 V
804-2430-10	40 A (amber)	32 V

Figure 25 Fuse location

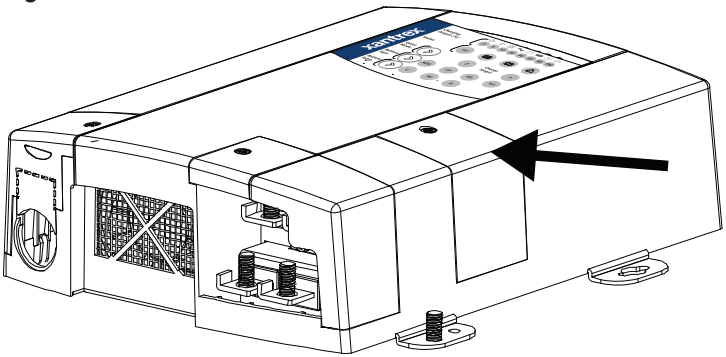

Troubleshooting

In the event that you have a problem with your TRUEcharge3, the following tables will help you to identify the problem and offer possible solutions to the problem. For more help not covered in this section, please contact https://xantrex.com/support/get-customer-support/.

Symptom

Indicator LEDs do not illuminate when charger is connected to an AC power source.

Possible Cause	Solution
No power at AC (mains) source.	Ensure that power is available at charger AC input and it is within acceptable range.
Defective AC wiring or switches/breakers	Wiring and wiring components must be inspected and replaced by a qualified installer.

Symptom

The initial power up display test is not performed upon connection of battery or batteries.

Possible Cause	Solution
TRUEcharge3 does not detect battery for one of the following reasons: - poor connection - reverse polarity connection (blown fuse) - damaged wiring - open DC breaker or external fuse - battery voltage is below 9 V	Check quality of battery connection and wires. Ensure correct polarity (negative connected to negative, positive connected to positive).

Symptom

Alert LED illuminates together with the 5 LED.

WARNING

EXPLOSION HAZARD

- Never charge a frozen battery.
- Never charge a Lithium Ion type battery with an ambient of 0 °C (32 °F) or colder.

Failure to follow these instructions can result in death, serious injury, or equipment damage.

Possible Cause	Solution
Battery temperature is either too hot or too cold for safe charging.	If battery is too hot, allow battery to cool. Improve ventilation or install in a cooler location. If the optional remote panel is available, you may reduce the output current using the Set Max Output button. If battery is too cold, allow batteries to warm up.

Symptom

TRUEcharge3 completes a charging cycle, but the battery voltage seems too low.

Possible Cause	Solution
Battery has a shorted cell.	Disconnect AC to the charger and check the battery voltage approximately one hour later. **NOTE:** If the charger is functioning properly but the charge cycles fail to bring the resting voltage up above 10 V for 12-volt chargers, then this confirms the battery has a damaged or shorted cell. Replace battery. The battery has reached the end of its useful life and can no longer accept a charge.

Symptom

The TRUEcharge3 appears to be taking too long to charge battery. Ready indicator LED does not illuminate after 24 hours of charging.

Possible Cause	Solution
Battery capacity is too high for the TRUEcharge3 model.	Use a higher capacity charger.
Load connected to battery is draining charge current so that battery does not recharge.	Disconnect all loads or switch loads off.
Battery has a damaged cell or has reached the end of its useful life.	Replace battery.
The Max Charging Current setting is too low for the battery capacity.	Increase the Max Charging Current setting.

Symptom

The TRUEcharge3 appears to have quickly charged the battery. Ready indicator LED illuminates sooner than expected.

Possible Cause	Solution
Battery capacity is too low for the TRUEcharge3 model.	Reduce the Maximum Charge Current setting.
Battery has a damaged cell or has reached the end of its useful life.	Replace battery.

Symptom

The TRUEcharge3 will not perform equalization.

Possible Cause	Solution
Battery is the wrong type, or set to the wrong type to equalize.	Determine if the battery type is set to Flooded (FLD). Only this battery type can be equalized.
Not all batteries are fully charged.	The charger will wait for all batteries to be in float stage of three-stage charging or rest stage of two-stage charging before attempting to equalize (the ready indicator LED will illuminate).
An active fault is present on the bank you are attempting to equalize.	Clear the active fault by disconnecting the AC power source.

8 SPECIFICATIONS

This section summarizes the hardware and electrical specifications of the TRUEcharge3 Series Battery Charger. This section includes:

Physical Specifications *70*
Environmental Specifications *70*
AC Input Specifications *71*
DC Output Specifications *71*
Protection Features *72*
Regulatory Approvals *73*

NOTE: Specifications are subject to change without prior notice.

Physical Specifications

	804-1220-10 804-1240-10	804-2410-10 804-2420-10	804-1260-10 804-2430-10
Base Unit Dimensions: L × W × H	250×170×70 mm (9.84×6.70×2.76 in.)	250×170×70 mm (9.84×6.70×2.76 in.)	340×170×90 mm (13.38×6.70×3.54 in.)
Weight	2.2 kg (4.8 lbs)	2.2 kg (4.8 lbs)	4.5 kg (9.9 lbs)
AC input connections	Three color-coded No. 16 AWG wires (L, N, gnd) minimum 152 mm (6 in.) long in a separate AC wiring enclosure with 21.3 mm (0.84 in.) hole provision for connection of a ½ inch North American "trade size" strain relief (included).		
DC output connections	Four M6 studs (3 positives and 1 common negative) for battery cable ring terminals and one M6 mm DC equipment ground		

Environmental Specifications

	TRUEcharge3
Operating range[a]	0 to 60 °C (32 to140 °F)
Storage	–40 to 80 °C (–40 to 176 °F)
Humidity	5 to 95%, RH non-condensing
Ingress Protection	IP32 (in specified mounting orientations only)

[a]70% current derating above 40 °C (104 °F). Operation may be limited depending on battery chemistry. Consult with the battery manufacturer for specific operational capacities regarding their batteries.

AC Input Specifications

AC input voltage range	
Nominal: **Full:** **Automatic derating to 80% output:**	120 | 230 | 240 V∼ 104 – 265 ±4V∼ 90 – 108 ±4V∼
Max. AC input current	804-1220-10 3.8 A 804-1240-10 7.7 A 804-1260-10 12.5 A 804-2410-10 3.8 A 804-2420-10 7.7 A 804-2430-10 12.5 A
Power factor at rated load	≥0.95
Frequency	47 – 63 Hz
Efficiency – peak	120 V∼ units 80% 230 V∼ units 84%
Surge protection	Line-to-neutral surge protector rated at 275 V∼

DC Output Specifications

	12VDC Units	24VDC Units
Battery types[a]	Flooded, GEL, AGM, LFP (lithium iron phosphate), or Custom	Flooded, GEL, AGM, LFP (lithium iron phosphate), or Custom
Minimum battery size	804-1220-10 40 A 804-1240-10 80 A 804-1260-10 120 A	804-2410-10 20 A 804-2420-10 40 A 804-2430-10 60 A
Number of diode-isolated battery bank outputs	3 separated outputs	3 separated outputs
DC (battery) output voltage range including dead battery charging voltage	0 – 16 V⎓	0 – 32 V⎓
Maximum equalization voltage	16 V⎓	32 V⎓
Voltage accuracy (no load)	14.4 ±0.1 V⎓ @ 25 °C (77 °F)	28.2 ±0.2 V⎓ @ 25 °C (77 °F)
Nominal battery voltage	12 V⎓	24 V⎓
Normal operating output range	0 – 16 V⎓	0 – 32 V⎓
Maximum DC output current (total)	804-1220-10 20+10% A 804-1240-10 40+10% A 804-1260-10 60+10% A	804-2410-10 10+10% A 804-2420-10 20+10% A 804-2430-10 30+10% A

[a]Do not mix battery types. Refer to battery manufacturer specifications for correct battery type.

	12VDC Units	24VDC Units
Absorption voltage @ 25 °C (77 °F)		
Flooded	14.4 ±0.1	28.8 ±0.2
GEL	14.2 ±0.1	28.4 ±0.2
AGM	14.3 ±0.1	28.6 ±0.2
LFP	14.6 ±0.1	29.2 ±0.2
Float voltage @ 25 °C (77 °F)		
Flooded	13.5 ±0.1	27.0 ±0.2
GEL	13.8 ±0.1	27.6 ±0.2
AGM	13.4 ±0.1	26.8 ±0.2
LFP	13.5 ±0.1	27.0 ±0.2
Equalize mode current	50% rated output ±6%	50% rated output ±6%
Equalize mode—maximum output voltage	16 ±0.1 V⎓	32 ±0.2 V⎓
Off-state current draw	<35 mA ⎓	<35 mA ⎓
Voltage regulation	Uncompensated load voltage regulation < 0.1 drop from 0 Amps to rated current output at charger output terminals (adds in series with recommended 3% limit for user's battery cable voltage drop).	Uncompensated load voltage regulation < 0.1 drop from 0 Amps to rated current output at charger output terminals (adds in series with recommended 3% limit for user's battery cable voltage drop).

Protection Features

	TRUEcharge3
Battery reverse polarity	Protected by replaceable V⎓ output fuses
Over-voltage limits	The TRUEcharge3 will stop charging if the output voltage is above : 16.6 ±0.5 V⎓ for 12 V⎓ units 33.2 ±0.1 V⎓ for 24 V⎓ units
Output current limit	804-1220-10 20 +10% A 804-1240-10 40 +10% A 804-1260-10 60 +10% A 804-2410-10 10 +10% A 804-2420-10 20 +10% A 804-2430-10 30 +10% A
Over-temperature (measured internally)	Shutdown at 65 ±5 °C (149 ±9 °F) Restart at 60 ±5 °C (140 ±9 °F)
Battery over-temperature protection	Charger shuts down if battery temperature above 70|50 °C (158|122 °F) is sensed by the optional battery temperature sensor (BTS).
Battery under-temperature protection[a]	Charger shuts down if battery temperature below –25|0 °C (–13|32 °F) is sensed by the battery temperature sensor (BTS).

[a]Charger shuts down if battery temperature 0|50 °C (32|122 °F) is sensed for LFP and Custom.

Regulatory Approvals

	TRUEcharge3
Safety	Listed to UL Std. UL1236, UL1564. Certified to CAN/CSA Standard C22.2 No. 60335-1, No. 60335-2-29.
EMI	47 CFR (FCC) Part 15B, Class B and ISED CAN ICES-003, Class B
Ignition protection	ABYC C-1500, UL 1236, CSA-C22.2 No. 107.2
DOE-CEC	10 CFR: Appendix Y to Subpart B of Part 430 CEC-140-2019-002: Appliance Efficiency Regulation*

* If the TRUEcharge3 is used within the United States and its territories as identified by the United States Department of the Interior, the charger should be configured to use its two-stage charging protocol only.